MH-1049
Volume II
Section 8

TECHNICAL MANUAL

MAGNETIC TAPE UNIT

TYPE 1540

(UNIVAC)

November 1967
(Revised August 7, 1972)

PX 3334-2-4

LIST OF EFFECTIVE PAGES

TOTAL NUMBER OF PAGES IS 128 , AS FOLLOWS :

Page No.	Issue
*Title	7 Aug 72
*A	7 Aug 72
*i	7 Aug 72
ii through iii	Original
Figures 8-1 through 8-2	Original
Figure 8-3	5 Nov 69
Figures 8-4 through 8-6	Original
*Figures 8-7 through 8-8	7 Aug 72
Figures 8-9 through 8-10	Original
*Figure 8-11	7 Aug 72
Figures 8-12 through 8-16	Original
*Figure 8-17	7 Aug 72
Figures 8-18 through 8-19	Original
Figure 8-20	5 Nov 69
Figure 8-21	Original
Figure 8-22	5 Nov 69
Figure 8-23	Original
*Figure 8-24	7 Aug 72
Figures 8-25 through 8-29	Original
Figure 8-30	5 Nov 69
Figures 8-31 through 8-47	Original
*Figures 8-48 through 8-52	7 Aug 72
Figures 8-53 through 8-65	Original
Figure 8-66	5 Nov 69
Figures 8-67 through 8-76	Original
Figure 8-77	5 Nov 69
Figures 8-78 through 8-81	Original
Figure 8-82	5 Nov 69
Figures 8-83 through 8-93	Original
Figures 8-94 through 8-95	5 Nov 69
Figures 8-96 through 8-117	Original
*Figures 8-118 through 8-121	7 Aug 72
Figures 8-122 through 8-123	Original

* The asterisk indicates pages revised, added or deleted by the current change.

RECORD-OF-CHANGES

DATE OF REVISION	CONTRACTOR & AUTHORITY	DESCRIPTION OF CHANGE	DATE OF REVISION	CONTRACTOR & AUTHORITY	DESCRIPTION OF CHANGE
Reissued November 1967	Univac NAS5-9816	EI's: 1895 1896 2360 2361 2362 2507 2555 2593 2594 2608 2640 2657 2705 2721 2722 2913 2914 2915 3251 3251, Ch. 1	August 7, 1972	Bendix NAS5-23000 DWR-0536	EI's: 4264 4264, Ch. 1 4540 4600 4600, Ch. 1 EC's: 0123-216E 0178-216E 0178-216E, Ch. 1 0178-216E, Ch. 2 CRS, GSFC July 29, 1971 CRS, CYI Aug. 25, 1971
November 5, 1969	Bendix NAS5-10750 TD-626 OMPUB-507	EI's: 3520 3251, Ch. 2 CRS, CYI Feb. 12, 1968 CRS, GWM July 17, 1968 CRS, MFLD Nov. 18, 1968 MPL-397			

LIST OF ILLUSTRATIONS

SECTION 8 - FUNCTIONAL SCHEMATICS

Figure		Drawing No.
8-1.	General Information	7030302
8-2.	I/O Control, Part 1	7030218C
8-3.	I/O Control, Part 2	7030219E
8-4.	Duplex Control, Part 1	7030222B
8-5.	Duplex Control, Part 2	7030223E
8-6.	Duplex Control, Part 3	7030224C
8-7.	Start Sequence, Part 1	7030216E
8-8.	Start Sequence, Part 2	7030217B
8-9.	Start Delays	7030225C
8-10.	Read Control	7030226D
8-11.	Write Control, Part 1	7030227A
8-12.	Write Control, Part 2	7030228B
8-13.	Search Control	7030256C
8-14.	Buffer Control, Part 1	7030234B
8-15.	Buffer Control, Part 2	7030235
8-16.	End of Record	7030259C
8-17.	Stop Delays	7030260D
8-18.	Function Register, Part 1	7030251C
8-19.	Function Register, Part 2	7030252A
8-20.	Function Register, Part 3	7030253B
8-21.	Function Translator, Part 1	7030254C
8-22.	Function Translator, Part 2	7030255B
8-23.	Status Register and Status Gates, Part 1	7030257F
8-24.	Status Register and Status Gates, Part 2	7030258B
8-25.	Character Control	7030242B
8-26.	Character Counter	7030243
8-27.	Frame Time Generator	7030231A
8-28.	Master Clear, Part 1	7030267B
8-29.	Master Clear, Part 2	7030268D
8-30.	Console Logic	7030269F
8-31.	Console Logic and Handler Test Oscillator	7030270A
8-32.	1541 Read Amplifiers and Detectors, Bits 0 - 3	7030240A
8-33.	1541 Read Amplifiers and Detectors, Bits 4 - 6	7030241A
8-34.	Read Compensation Delays, Bits 00 - 03	7030244
8-35.	Read Compensation Delays, Bits 04 - 06	7030245A
8-36.	Read Register, Bits 00 - 03	7030229A
8-37.	Read Register, Bits 04 - 06	7030230
8-38.	R Accumulator	7030248A
8-39.	Longitudinal Count Register, Bits 00 - 03	7030246
8-40.	Longitudinal Count Register, Bits 04 - 06	7030247
8-41.	R* Register	7030239
8-42.	A0 Register	7030200A
8-43.	A1 Register	7030201
8-44.	A2 Register	7030202
8-45.	A3 Register	7030203
8-46.	A4 Register	7030204
8-47.	A5 Register	7030205
8-48.	Write Encoder, Part 1	7030220
8-49.	Write Encoder, Part 2	7030221
8-50.	Write Compensation Delays	7030261
8-51.	Write Register, Bits 00 - 03	7030262
8-52.	Write Register, Bits 04 - 06	7030263
8-53.	1541 Write Amplifiers, Bits 0 - 3	7030249
8-54.	1541 Write Amplifiers, Bits 4 - 6	7030250A
8-55.	C Register, Bits 00 - 03	7030206
8-56.	C Register, Bits 04 - 07	7030207
8-57.	C Register, Bits 08 - 11	7030208
8-58.	C Register, Bits 12 - 15	7030209
8-59.	C Register, Bits 16 - 19	7030210A
8-60.	C Register, Bits 20 - 23	7030211
8-61.	C Register, Bits 24 - 27	7030212
8-62.	C Register, Bits 28 - 31	7030213
8-63.	C Register, Bits 32 - 35	7030214
8-64.	Tape Handler Delay Selector	7030264
8-65.	Deskewing Adjustments, Part 1	7030271
8-66.	Deskewing Adjustments, Part 2	7030272A
8-67.	Deskewing Adjustments, Part 3	7030273
8-68.	Tape Handler Address Amplifiers	7030265
8-69.	1540 Tape Handler 1 Address Switch	7030282A
8-70.	1540 Tape Handler 2 Address Switch	7030283A
8-71.	1541 Tape Handler Address Switch	7030215
8-72.	Function Amplifiers	7030266
8-73.	1540 Local Tape Handler Control 1, Part 1	7030284C
8-74.	1540 Local Tape Handler Control 1, Part 2	7030285D
8-75.	1540 Local Tape Handler Control 1, Part 3	7030286D
8-76.	1540 Local Tape Handler Control 2, Part 1	7030287C
8-77.	1540 Local Tape Handler Control 2, Part 2	7030288E
8-78.	1541 Local Tape Handler Control, Part 1	7030289B
8-79.	1541 Local Tape Handler Control, Part 2	7030290C
8-80.	1541 Local Tape Handler Control, Part 3	7030291A
8-81.	1540 Tape Handler 1, Read Amplifiers and Detectors, Bits 0 - 3	7030278B
8-82.	1540 Tape Handler 1, Read Amplifiers and Detectors, Bits 4 - 6	7030279A
8-83.	1540 Tape Handler 2, Read Amplifiers and Detectors, Bits 0 - 3	7030280
8-84.	1540 Tape Handler 2, Read Amplifiers and Detectors, Bits 4 - 6	7030281A
8-85.	1540 Tape Handler 1, Write Amplifiers, Part 1	7030274
8-86.	1540 Tape Handler 1, Write Amplifiers, Part 2	7030275A
8-87.	1540 Tape Handler 2, Write Amplifiers, Part 1	7030276A
8-88.	1540 Tape Handler 2, Write Amplifiers, Part 2	7030277
8-89.	Clock Logic, Part 1	7030236D
8-90.	Clock Logic, Part 2	7030237
8-91.	Clock Logic, Part 3	7030238
8-92.	Clock Distribution, Phase 1 and 2	7030232A
8-93.	Clock Distribution, Phase 3 and 4	7030233B
8-94.	Basic Cabinet Power Control, 1540 Magnetic Tape Unit, Air Cooled, Part 1	7030292E
8-95.	Basic Cabinet Power Control, 1540 Magnetic Tape Unit, Water Cooled, Part 1	7030312E
8-96.	Basic Cabinet Power Control, 1540 Magnetic Tape Unit, Part 2	7030293B

LIST OF ILLUSTRATIONS (CONT.)

SECTION 8 - FUNCTIONAL SCHEMATICS (CONT.)

Figure		Drawing No.
8-97.	Basic Cabinet Power Control, 1540 Magnetic Tape Unit, Part 3	7030303B
8-98.	Add On Unit Power Control, 1540 Magnetic Tape Unit, Air Cooled, Part 1	7030313D
8-99.	Add On Unit Power Control, 1540 Magnetic Tape Unit, Water Cooled, Part 1	7030314D
8-100.	Add On Unit Power Control, 1540 Magnetic Tape Unit, Part 2	7030315B
8-101.	1540/1541 Power Supplies, PS-1 and Logic Magnetic Tape Unit	7030295D
8-102.	Basic Cabinet Power Control, 1541 Magnetic Tape Unit, Air Cooled, Part 1	7030319
8-103.	Basic Cabinet Power Control, 1541 Magnetic Tape Unit, Water Cooled, Part 1	7030320
8-104.	Basic Cabinet Power Control, 1541 Magnetic Tape Unit, Part 2	7030322
8-105.	Basic Cabinet Power Control, 1541 Magnetic Tape Unit, Part 3	7030321
8-106.	Add On Unit Power Control, 1541 Magnetic Tape Unit, Air Cooled, Part 1	7030317
8-107.	Add On Unit Power Control, 1541 Magnetic Tape Unit, Water Cooled, Part 1	7030316
8-108.	Add On Unit Power Control, 1541 Magnetic Tape Unit, Part 2	7030318A
8-109.	DC Power Distribution, 1540/1541 Magnetic Tape Unit	7030294
8-110.	Power Distribution, Chassis A12A1	7030304A
8-111.	Power Distribution, Chassis A12A2	7030305
8-112.	Power Distribution, Chassis A12A1 and A12A2 Panel Wiring	7030306
8-113.	Power Distribution, Chassis A13A1	7030307B
8-114.	Power Distribution, Chassis A13A2	7030308B
8-115.	Power Distribution, Chassis A13A1 and A13A2 Panel Wiring	7030309
8-116.	Power Distribution, Chassis A17 - 1540 MTU	7030310A
8-117.	Power Distribution, Chassis A3A3 - 1541 MTU	7030311
8-118.	Chassis Map, Chassis A12A1, 1540/1541 Magnetic Tape Unit	7030301D
8-119.	Chassis Map, Chassis A12A2, 1540/1541 Magnetic Tape Unit	7030298H
8-120.	Chassis Map, Chassis A13A1, 1540/1541 Magnetic Tape Unit	7030300C
8-121.	Chassis Map, Chassis A13A2, 1540/1541 Magnetic Tape Unit	7030299C
8-122.	Chassis Map, Chassis A17, 1540 Magnetic Tape Unit	7030296D
8-123.	Chassis Map, Chassis A3A3, 1541 Magnetic Tape Unit	7030297D

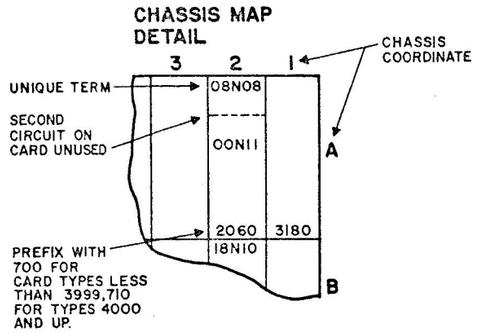

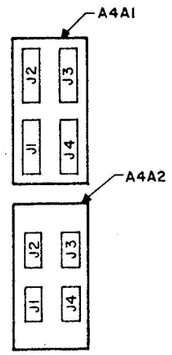

A4 ASSEMBLY FRONT VIEW

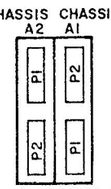

CHASSIS PLUG LOCATION (TYP) REAR VIEW
A12 OR A13

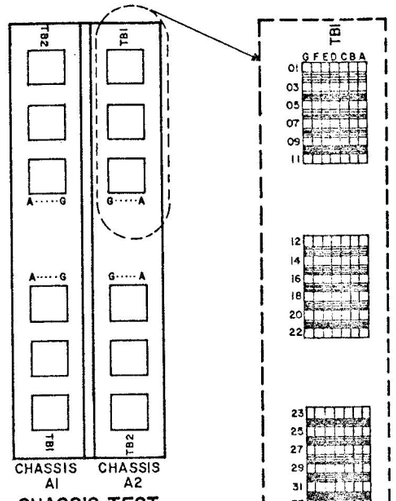

CHASSIS TEST BLOCKS (TYP) FRONT VIEW

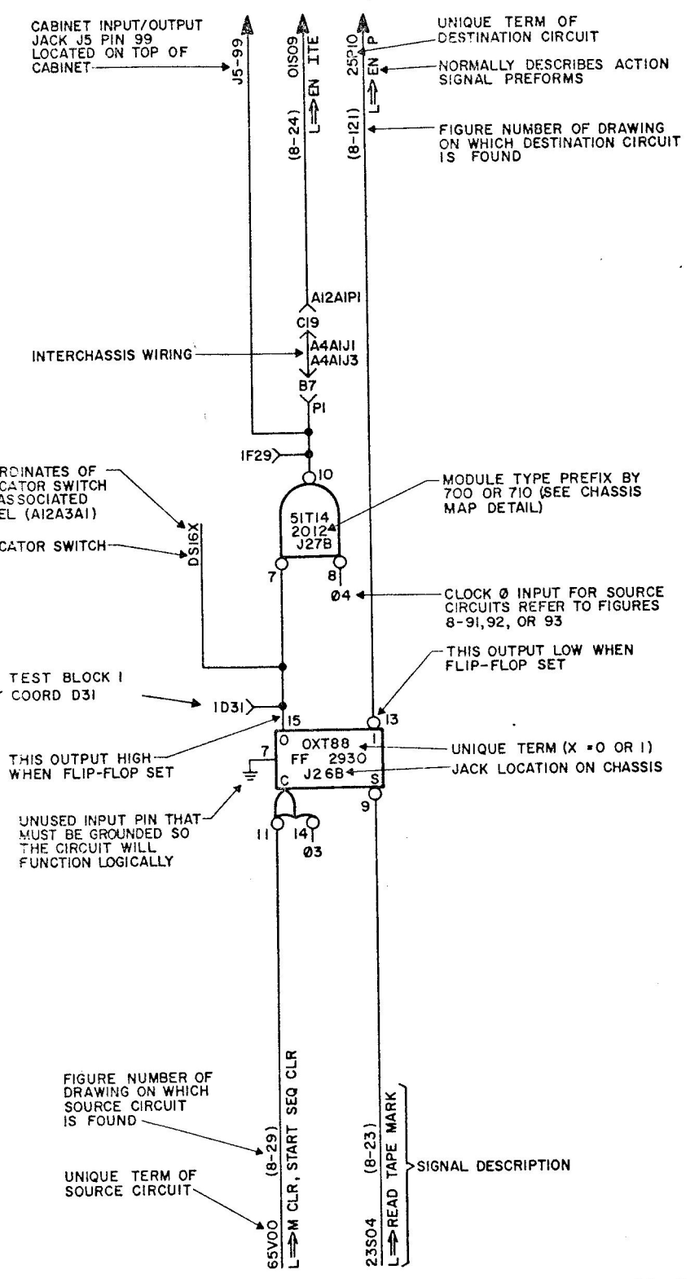

NOTE:
1. ⇒ IS INTERPRETED AS "IF WHEN, OR MEANS"
2. L-LOW-IN REFERENCE TO LOGIC SIGNALS, REPRESENTS -4.5 V AND IN REFERENCE TO NON-LOGIC SIGNALS, REPRESENTS -15 V
3. H-HIGH-IN REFERENCE TO SIGNALS REPRESENTS 0.0 VOLTS DC
4. NON-STANDARD ABBREVIATIONS:

ACK-ACKNOWLEDGE
ADDR-ADDRESS
AMPS-AMPLIFIERS
BPI-BITS PER INCH
CLD-CONTROL LINE DRIVER
COND-CONDITIONAL
CT-COUNT
EF-EXTERNAL FUNCTION
EN-ENABLE
EOR-END OF RECORD
EOT-END OF TAPE
EOW-END OF WRITE
ERR-ERROR
FTG-FRAME TIME GENERATOR
FUNCT-FUNCTION
FWD-FORWARD
IA-INPUT AMPLIFIER
IDR-INPUT DATA REQUEST
IMPCOND-IMPROPER CONDITION
I/O-INPUT/OUTPUT
IRG-INTER RECORD GAP
ITE-INPUT TIMING ERROR
K-CHARACTER
Kc-CHARACTER COUNTER
M CLR-MASTER CLEAR
MOD-MODULUS, MODULI, OR MODIFIED
ODR-OUTPUT DATA REQUEST
OP-OPERATION
OTE-OUTPUT TIMING ERROR
RCD-READ COMPENSATION DELAY
REQ-REQUEST OR REQUIRE
RL-R REGISTER LOWER
RL*-R* REGISTER LOWER
RU-R REGISTER UPPER
RU*-R* REGISTER UPPER
RWD-REWIND
SELECT-SELECTIVE
TM-TAPE MARK
WCD-WRITE COMPENSATION DELAY
XIRG-EXTENDED INTER RECORD GAP

A12A2
INDICATES CHASSIS ON WHICH CIRCUITS DEPICTED ARE PHYSICALLY LOCATED

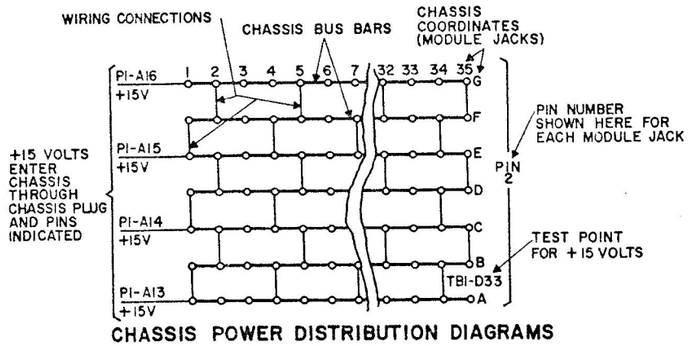

CHASSIS POWER DISTRIBUTION DIAGRAMS

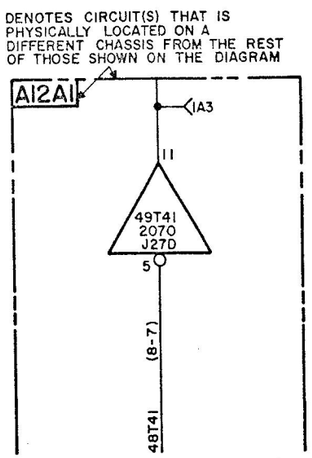

FIGURE 8-1

QTY REQD	FIND	REF DES	CODE IDENT	DWG SIZE	PART OR IDENTIFYING NO.	NOMENCLATURE OR DESCRIPTION

LIST OF MATERIAL

IDENT NO. 7030302-00

THIS DOCUMENT CONTAINS CONFIDENTIAL INFORMATION OF THE UNIVAC DIVISION OF SPERRY RAND CORPORATION AND IS FURNISHED PURSUANT TO THE FOLLOWING INSTRUMENT:

ON THE UNDERSTANDING THAT THIS DOCUMENT AND THE INFORMATION THEREON MAY NOT BE DEALT WITH IN ANY MANNER EXCEPT FOR THE PURPOSES OF THAT INSTRUMENT OR AS OTHERWISE PERMITTED IN WRITING BY THE UNIVAC DIVISION OF SPERRY RAND CORPORATION.

UNLESS OTHERWISE SPECIFIED
DIMENSION IN INCHES. TOLERANCE ON
2 PLACE DECIMALS ± | 3 PLACE DECIMALS ± | ANGLES ±
HOLE DIAMETER TOLERANCE
0 THRU .250 +.003 -.002 | .251 THRU .500 +.005 -.003 | .501 & LARGER +.010 -.005
THREADS: EXT CL 2A, INT CL 2B
MATERIAL
NEXT ASSY | EQUIPMENT
APPLICATION
COMMODITY CODE
FINISH

LAYOUT		DATE
DRAFTSMAN	D.C. WHEELER	11-8-65
CHECKER	B. POPOV	11/15/65
ENGINEER	R. L. HENCLEY	11/15/65
APPROVAL	R Hencley	11/15/65

CLASS A

UNIVAC
DIVISION OF SPERRY RAND CORPORATION

TITLE
GENERAL INFORMATION

CODE IDENT NO.	SIZE	DWG NO.
90536	D	7030302

SCALE | WEIGHT | SHEET 1 OF 1

REVISIONS						
SYM	ZONE	EIR	DESCRIPTION	SEE	DATE	APPROVED

REVISION			
A	69701	SEE EIR	
B	79489	SEE EIR	
C	90495	SEE EIR	

A12A1

NOTE:
1. FAST INTERFACE MODULE IA TYPE 7002320.
2. FAST INTERFACE SHOWN.
3. SLOW INTERFACE MODULE IA TYPE 7002090.

FIGURE 8-2

IDENT NO. 7030218-00

QTY REQD	FIND	REF DES	CODE IDENT	DWG SIZE	PART OR IDENTIFYING NO.	NOMENCLATURE OR DESCRIPTION

LIST OF MATERIAL

UNIVAC
DIVISION OF SPERRY RAND CORPORATION

		DATE
LAYOUT		
DRAFTSMAN	J R CURTIS	3/9/65
CHECKER	B POPOV	4/28/65
ENGINEER	R.D MCCUMBER	10-28-65
APPROVAL		10-28-65

CLASS A

TITLE: FUNCTIONAL SCHEMATIC, I/O CONTROL, PART 1

CODE IDENT NO.	SIZE	DWG NO.
90536	D	7030218

SCALE | WEIGHT | SHEET 1 OF 1

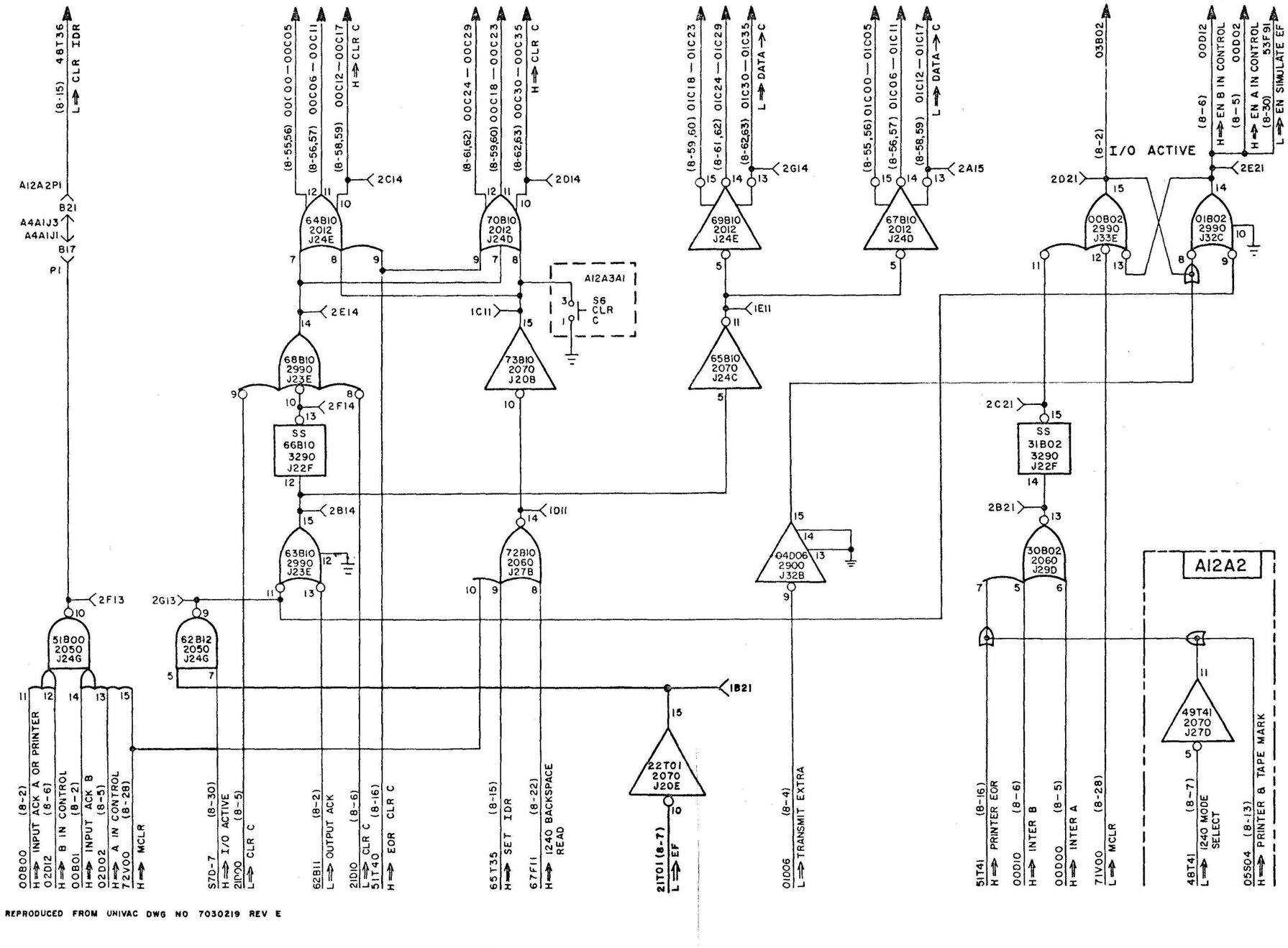

REPRODUCED FROM UNIVAC DWG NO 7030219 REV E

NOTE:

1. 04D06 IS A FLIP-FLOP MODULE, BUT IS WIRED TO PERFORM AS AN INVERTER.

Figure 8-3. I/O Control, Part 2, Functional Schematic

REVISIONS					
LTR	ZONE	ECR	DESCRIPTION	DATE	APPROVED
A		79489	SEE EIR	6-22-66	RJP
B		90255	SEE EIR	8-17-67	

A12A1

NOTE:
1. EF INPUTS SHOWN ARE FOR NON-DUPLEX EF A AND DEMAND B.
2. DUPLEX CONTROL CODES

CODE		FUNCTION
CI7	CI6	
0	0	NON-DUPLEX
0	1	RELEASE CONTROL
1	0	REQUEST CONTROL
1	1	DEMAND CONTROL OR EF MASTER CLEAR

* BIT 6 & BIT 17 "1's" REFLECT a TRANSMIT EXTRA EF.

FIGURE 8-4

QTY REQD	FIND	REF DES	CODE IDENT	DWG SIZE	PART OR IDENTIFYING NO.	NOMENCLATURE OR DESCRIPTION

LIST OF MATERIAL

IDENT NO. 7030222-00

LAYOUT		DATE
DRAFTSMAN J.R. CURTIS		3-24-65
CHECKER B. POPOV	RJP	10/28/65
ENGINEER R.D. MCCUMBER	R.D.M.	10-28-65
APPROVAL		10-28-65

CLASS A

UNIVAC
DIVISION OF SPERRY RAND CORPORATION

TITLE
FUNCTIONAL SCHEMATIC, DUPLEX CONTROL, PART 1

CODE IDENT NO.	SIZE	DWG NO.
90536	D	7030222

SCALE — WEIGHT — SHEET 1 OF 1

REVISIONS						
LTR	ZONE	E.C.P. NO.	DESCRIPTION		DATE	APPROVED
A		69713	SEE EIR		3-17-66	
B		77792	SEE EIR		6-22-66	
C		90255	SEE EIR		4-25-67	
D		90977	SEE EIR		4-25-67	
E		92179	SEE EIR		4-5-67	

NOTE:
1. FAST INTERFACE MODULE CLD TYPE 7002330.
2. SLOW INTERFACE MODULE CLD TYPE 7002130

A12A1

FIGURE 8-5

QTY REQD	FIND	REF DES	CODE IDENT	DWG SIZE	PART OR IDENTIFYING NO.	NOMENCLATURE OR DESCRIPTION

LIST OF MATERIAL

IDENT NO. 7030223-00

THIS DOCUMENT CONTAINS CONFIDENTIAL INFORMATION OF THE UNIVAC DIVISION OF SPERRY RAND CORPORATION AND IS FURNISHED PURSUANT TO THE FOLLOWING INSTRUMENT.

BY THE UNDERSTANDING THAT THIS DOCUMENT AND THE INFORMATION THEREIN WILL BE HELD IN CONFIDENCE AND WILL NOT BE DISCLOSED, REPRODUCED OR USED IN WHOLE OR IN PART FOR THE PURPOSES OF THIS INSTRUMENT OR FOR ANY OTHER PURPOSE WITHOUT THE PRIOR WRITTEN CONSENT OF SPERRY RAND CORPORATION.

UNLESS OTHERWISE SPECIFIED
DIMENSION IN INCHES TOLERANCE ON
2 PLACE DECIMALS ± .01 | 3 PLACE DECIMALS ± .005 | ANGLES ±
HOLE DIAMETER TOLERANCE
0 THRU 250 +.003 −.002 | .251 THRU .500 +.005 −.005 | .501 & LARGER +.010 −.005
THREADS EXPRESSED AS INT CL 2B
MATERIAL
NEXT ASSY | EQUIPMENT
APPLICATION
FINISH

		DATE
LAYOUT		
DRAFTSMAN J. R. CURTIS		3-25-65
CHECKER B. POPOV	2618 B.P.	
ENGINEER R.D. MCCUMBER	R.D.M.	12-28-65
APPROVAL		10-28-65

CLASS A

UNIVAC
DIVISION OF SPERRY RAND CORPORATION

TITLE
FUNCTIONAL SCHEMATIC, DUPLEX CONTROL, PART 2

CODE IDENT NO.	SIZE	DWG NO.
90536	D	7030223

SCALE | WEIGHT | SHEET 1 OF 1

REVISIONS						
SYM	ZONE	EIR	DESCRIPTION	BY	DATE	APPROVED
A		69701	SEE EIR			
B		92179	SEE EIR			
C		100441	SEE EIR			

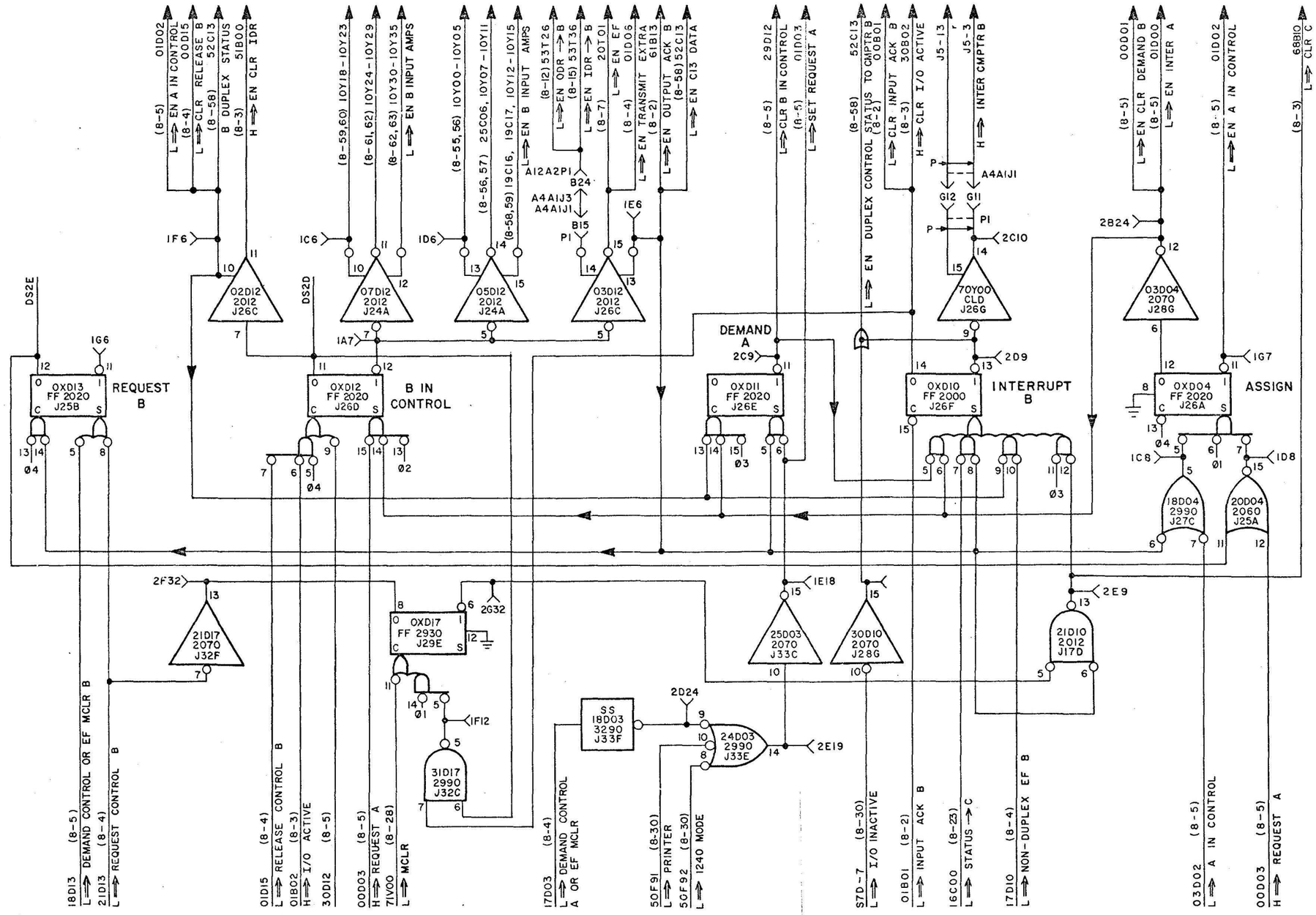

A12A1

NOTE:
1. FAST INTERFACE MODULE CLD TYPE 7002330.
2. SLOW INTERFACE MODULE CLD TYPE 7002130.

FIGURE 8-6

QTY REQD	FIND	REF DES	CODE IDENT	DWG SIZE	PART OR IDENTIFYING NO.	NOMENCLATURE OR DESCRIPTION

LIST OF MATERIAL

IDENT NO. 7030224-00

THIS DOCUMENT CONTAINS CONFIDENTIAL INFORMATION OF SPERRY RAND CORPORATION AND IS FURNISHED FOR USE TO THE RECIPIENT ONLY.

BY THE UNDERSTANDING THAT THIS DISCLOSURE AND THE INFORMATION HEREIN SHALL NOT BE REPRODUCED IN ANY MANNER EXCEPT AS PERMITTED BY THE TERMS OF THIS AGREEMENT OR THAT WRITTEN AUTHORITY IS OBTAINED FROM THE SPERRY RAND CORPORATION.

UNLESS OTHERWISE SPECIFIED: DIMENSION IN INCHES TOLERANCE ON 2 PLACE DECIMALS ± , 3 PLACE DECIMALS ± , ANGLES ± ; HOLE DIAMETER TOLERANCE: 0 THRU .250 +.003 −.002; .251 THRU .500 +.005 −.003; .501 & LARGER +.010 −.005; THREADS EXTERNAL INT CL 2B; MATERIAL; FINISH; NEXT ASSY; EQUIPMENT APPLICATION; SECURITY CODE

		DATE
LAYOUT		
DRAFTSMAN J R CURTIS		3-29-65
CHECKER B. POPOV		4/6/65
ENGINEER R.D. MCCUMBER		10-28-65
APPROVAL		11/8/65

UNIVAC
DIVISION OF SPERRY RAND CORPORATION

TITLE: FUNCTIONAL SCHEMATIC, DUPLEX CONTROL, PART 3

CLASS	CODE IDENT NO.	SIZE	DWG NO.
A	90536	D	7030224

SCALE | WEIGHT | SHEET 1 OF 1

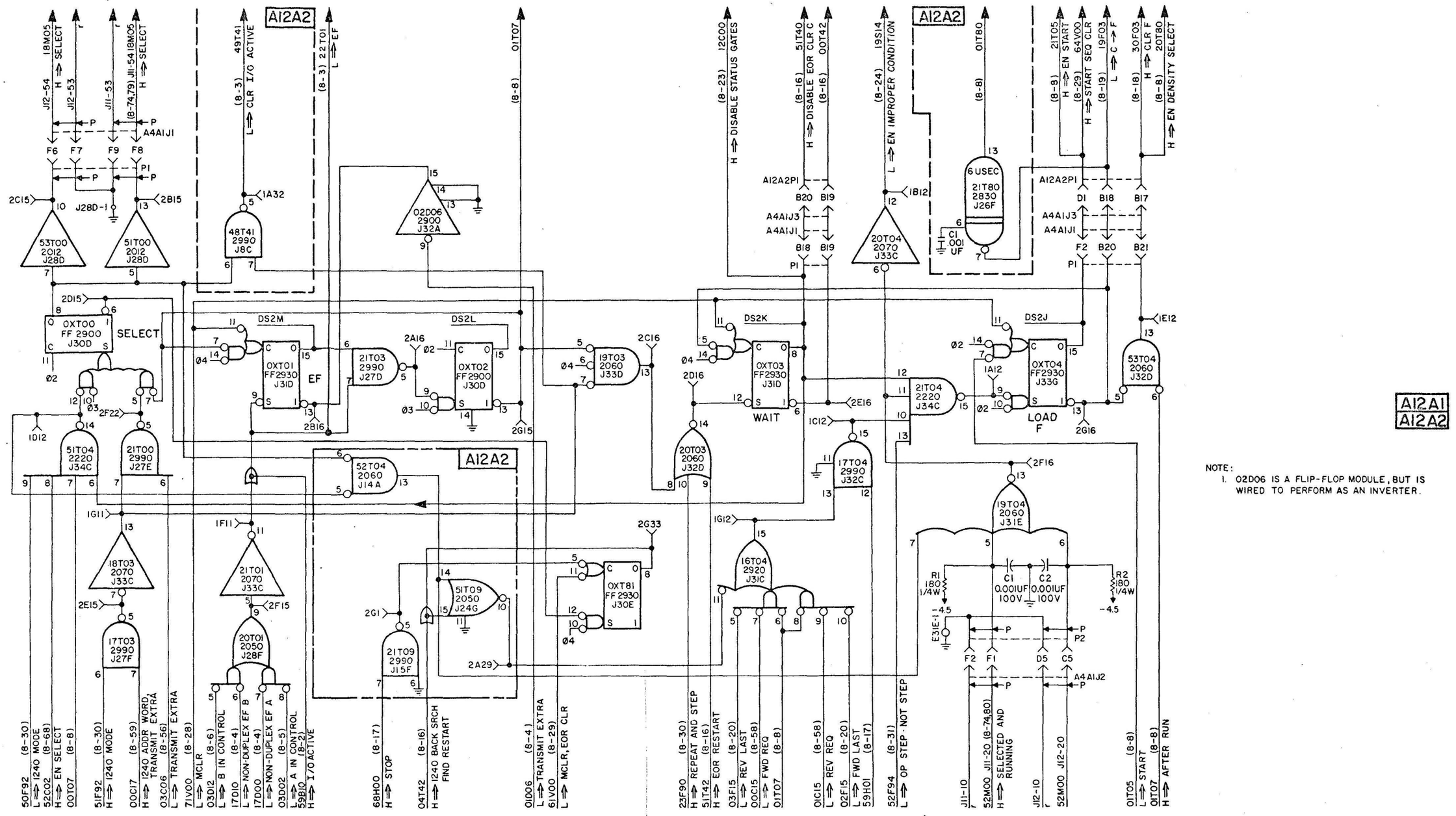

REPRODUCED FROM UNIVAC DWG NO 7030216 REV E

Figure 8-7. Start Sequence, Part 1, Functional Schematic

REVISED AUGUST 7, 1972

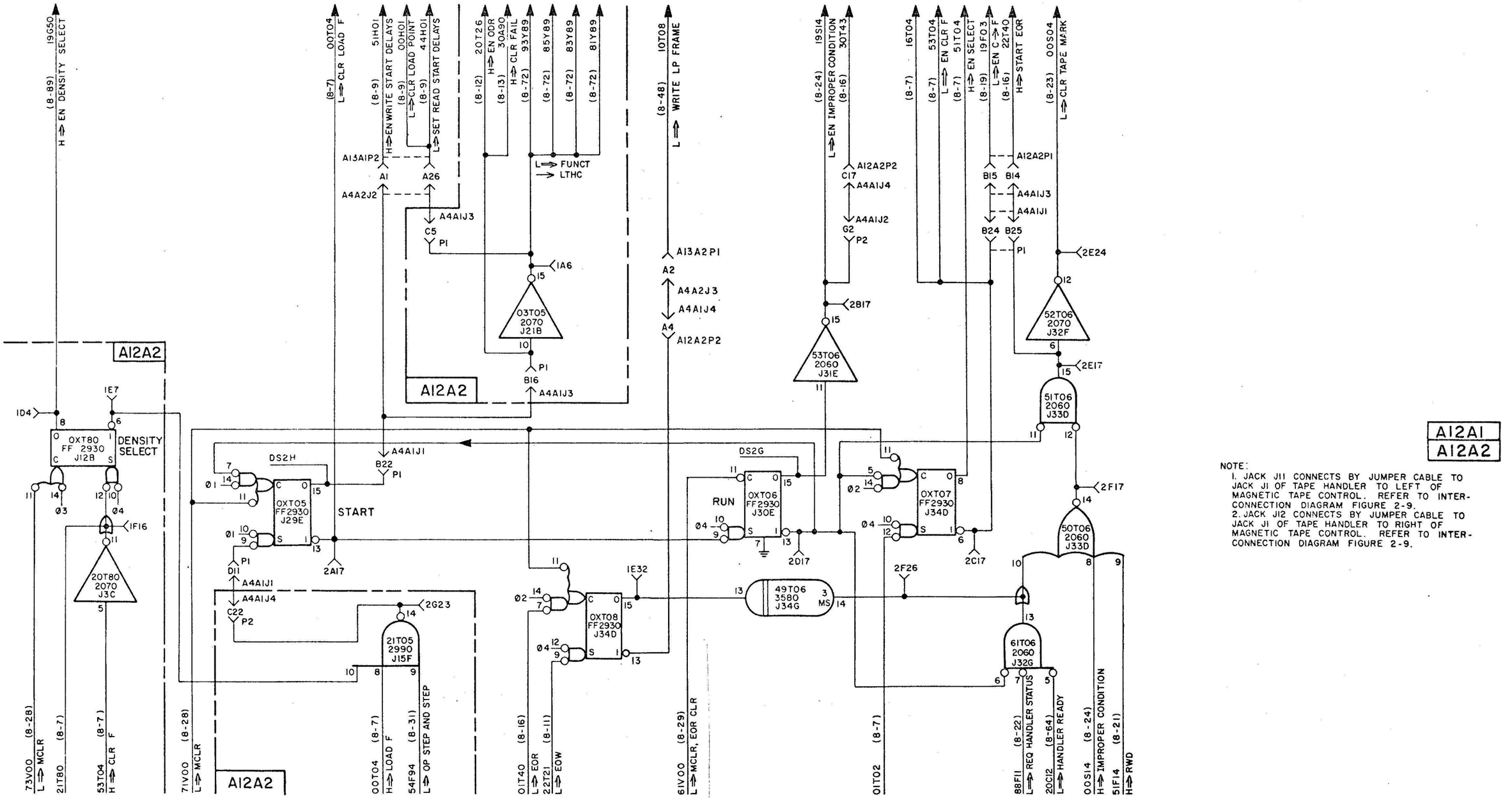

NOTE:
1. JACK J11 CONNECTS BY JUMPER CABLE TO JACK J1 OF TAPE HANDLER TO LEFT OF MAGNETIC TAPE CONTROL. REFER TO INTERCONNECTION DIAGRAM FIGURE 2-9.
2. JACK J12 CONNECTS BY JUMPER CABLE TO JACK J1 OF TAPE HANDLER TO RIGHT OF MAGNETIC TAPE CONTROL. REFER TO INTERCONNECTION DIAGRAM FIGURE 2-9.

REPRODUCED FROM UNIVAC DWG NO 7030217 REV B.

Figure 8-8. Start Sequence, Part 2, Functional Schematic

REVISIONS					
SYM	ZONE	EIR	DESCRIPTION	DATE	APPROVED
A		69713	SEE EIR	5-11-67	GWB
B		92183	SEE EIR	8-4-67	RLB
C		100441	SEE EIR	12-21-67	RLB

A13A1

*		
MTU	HANDLER	DELAY
1540	POTTER	4.5MS
1541	POTTER	4.0MS
1541	AMPEX	3.8MS

**		
MTU	HANDLER	DELAY
1540	POTTER	3.0MS
1541	POTTER	3.0MS
1541	AMPEX	3.9MS

***		
MTU	HANDLER	DELAY
1540	POTTER	20MS
1541	POTTER	20MS
1541	AMPEX	20MS

IDENT NO. 7030225-00

FIGURE 8-9

QTY REQD	FIND	REFDES	CODE IDENT	DWG SIZE	PART OR IDENTIFYING NO.	NOMENCLATURE OR DESCRIPTION

LIST OF MATERIAL

UNIVAC
DIVISION OF SPERRY RAND CORPORATION

LAYOUT		DATE
DRAFTSMAN	J.R. CURTIS	331-65
CHECKER	B. POPOV	10/25/65
ENGINEER	R.D. MCCUMBER	10-29-65
APPROVAL		10-31-65

CLASS A

TITLE: FUNCTIONAL SCHEMATIC, START DELAYS

CODE IDENT NO.	SIZE	DWG NO.
90536	D	7030225

SCALE | WEIGHT | SHEET 1 OF 1

REVISIONS						
LTR	ZONE	ECR	DESCRIPTION	BY	DATE	APPROVED
A		69713	SEE ECR	[illegible]	[illegible]	[illegible]
B		75711	SEE ECR	[illegible]	12-16-66	[illegible]
C		A77224	SEE ECR	[illegible]	[illegible]	[illegible]
D		91338	SEE ECR	[illegible]	[illegible]	[illegible]

A12A2

NOTE :
1. J34D-3, -15V (1540A ONLY).

FIGURE 8-10

QTY REQD	FIND	REF DES	CODE IDENT	DWG SIZE	PART OR IDENTIFYING NO	NOMENCLATURE OR DESCRIPTION

LIST OF MATERIAL

IDENT NO. 7030226-00

UNIVAC
DIVISION OF SPERRY RAND CORPORATION

TITLE: FUNCTIONAL SCHEMATIC, READ CONTROL

CLASS	CODE IDENT NO.	SIZE	DWG NO.
A	90536	D	7030226

SCALE | WEIGHT | SHEET 1 OF 1

	NAME	DATE
LAYOUT		
DRAFTSMAN	J R CURTIS	4-1-65
CHECKER	B. POPOV	10-28-65
ENGINEER	R.D. MCCUMBER	10-28-65
APPROVAL	R. Hensley	10-28-65

UNLESS OTHERWISE SPECIFIED
DIMENSION IN INCHES, TOLERANCE ON
2 PLACE DECIMALS ± | 3 PLACE DECIMALS ± | ANGLES ±
HOLE DIAMETER TOLERANCE
0 THRU .250 +.003 −.002 | .251 THRU .500 +.005 −.003 | .501 & LARGER +.010 −.005
THREADS EXTERNAL INT CL 2B
MATERIAL
FINISH
NEXT ASSY | EQUIPMENT
APPLICATION
DO NOT SCALE PRINT

THIS DOCUMENT CONTAINS CONFIDENTIAL INFORMATION OF THE UNIVAC DIVISION OF SPERRY RAND CORPORATION AND IS FURNISHED FOR USE OF THE FOLLOWING INSTRUMENT
IN THE EVENT THAT NO CONTRACT OR AGREEMENT SETS THE TERMS FOR SUCH USE, THIS DOCUMENT MAY IN ANY MANNER ACCEPTED BY THE RECIPIENT, CONSTITUTE AN OFFER OF A LICENSE TO USE THE INFORMATION CONTAINED HEREIN ON TERMS AND CONDITIONS OF SPERRY RAND CORPORATION

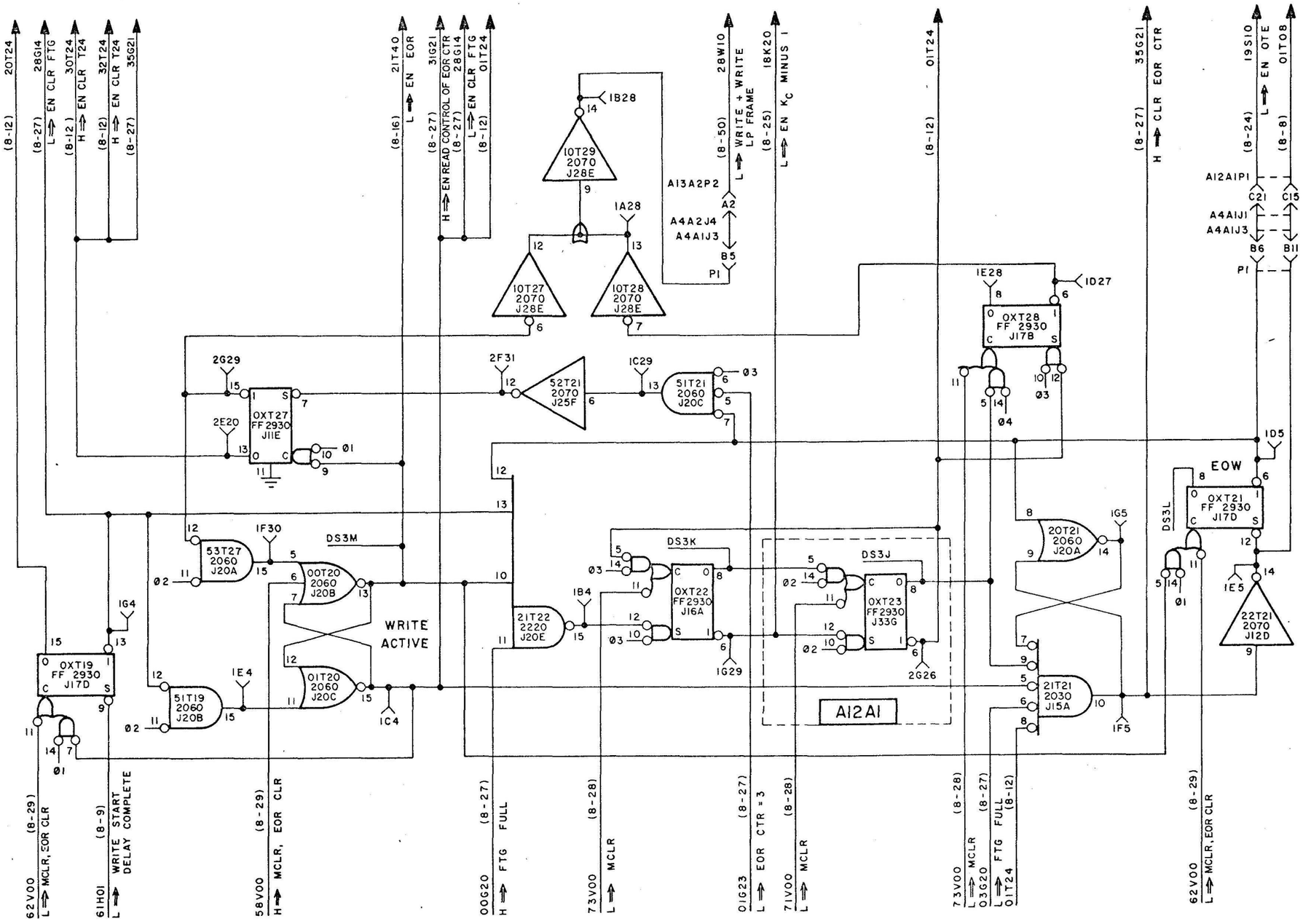

REPRODUCED FROM UNIVAC DWG NO 7030227 REV A.

A12A1
A12A2

Figure 8-11. Write Control, Part 1, Functional Schematic

REVISIONS						
LTR	ZONE	EIR	DESCRIPTION	BY	DATE	APPROVED
A		69713	SEE EIR		2-16-66	A.W.B.
B		75711	SEE EIR		4-26-66	A.W.B.

A12A2

NOTE:
1. * 7 MICROSECONDS FOR SLOW INTERFACE. 1.2 MICROSECONDS FOR FAST INTERFACE.
2. FAST INTERFACE MODULE CLD TYPE 7002330.
3. SLOW INTERFACE MODULE CLD TYPE 7002130.

FIGURE 8-12

QTY REQD	FIND	REF DES	CODE IDENT	DWG SIZE	PART OR IDENTIFYING NO.	NOMENCLATURE OR DESCRIPTION

LIST OF MATERIAL

IDENT NO. 7030228-00

UNIVAC
DIVISION OF SPERRY RAND CORPORATION

LAYOUT		DATE
DRAFTSMAN	J R CURTIS	4-2-65
CHECKER	B. POPOV	10/28/65
ENGINEER	R.D. MCCUMBER	10-28-65
APPROVAL		10-6-66

CLASS A

TITLE: FUNCTIONAL SCHEMATIC, WRITE CONTROL, PART 2

CODE IDENT NO.	SIZE	DWG NO.
90536	D	7030228

SCALE | WEIGHT | SHEET 1 OF 1

REVISIONS						
SYM	ZONE	EIR	DESCRIPTION	BY	DATE	APPROVED
A		69701	SEE EIR			
B		77792	SEE EIR			
C		79489	SEE EIR			

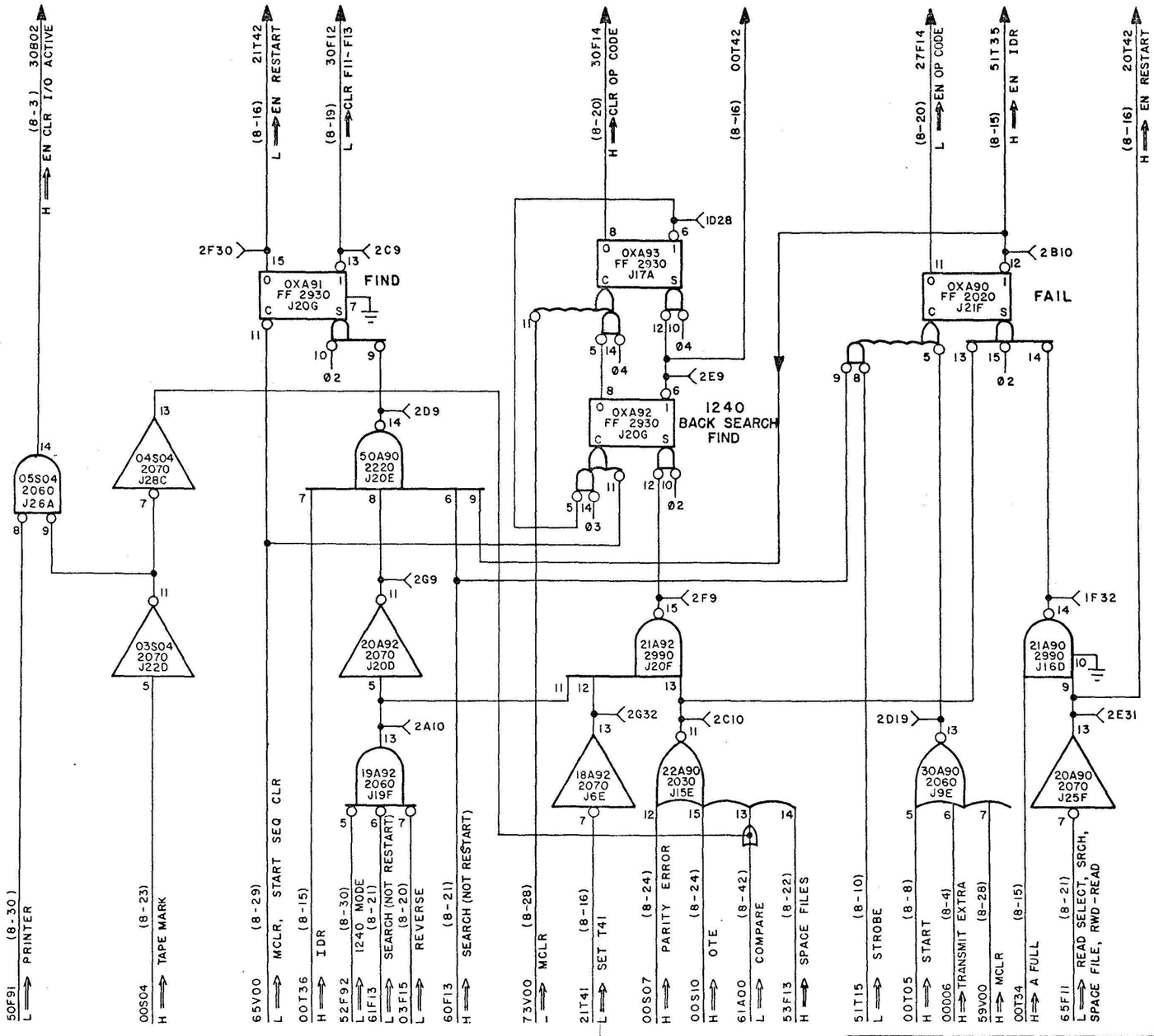

A12A2

FIGURE 8-13

QTY REQD	FIND	REF DES	CODE IDENT	DWG SIZE	PART OR IDENTIFYING NO.	NOMENCLATURE OR DESCRIPTION

LIST OF MATERIAL

IDENT NO. 7030256-00

UNLESS OTHERWISE SPECIFIED DIMENSION IN INCHES TOLERANCE ON 2 PLACE DECIMALS ± 1 PLACE DECIMALS ± ANGLES ±
HOLE DIAMETER TOLERANCE 0 THRU 250 +.003 −.002; 251 THRU 500 +.005 −.005; 501 & LARGER +.010 −.005
THREADS EXTERNAL INTERNAL 2B
MATERIAL
NEXT ASSY | EQUIPMENT
APPLICATION
FINISH

LAYOUT		DATE
DRAFTSMAN	J. R. CURTIS	5-6-65
CHECKER	B. POPOV	10-28-65
ENGINEER	R.D. MCCUMBER	10-28-65
APPROVAL		10-28-65

CLASS A

UNIVAC
DIVISION OF SPERRY RAND CORPORATION

TITLE
FUNCTIONAL SCHEMATIC, SEARCH CONTROL

CODE IDENT NO.	SIZE	DWG NO.
90536	D	7030256

SCALE | WEIGHT | SHEET 1 OF 1

REVISIONS					
SYM	ZONE	E.R.	DESCRIPTION	BY	APPROVED
A		69714	SEE E.I.R.		
B		79489	SEE E.I.R.		

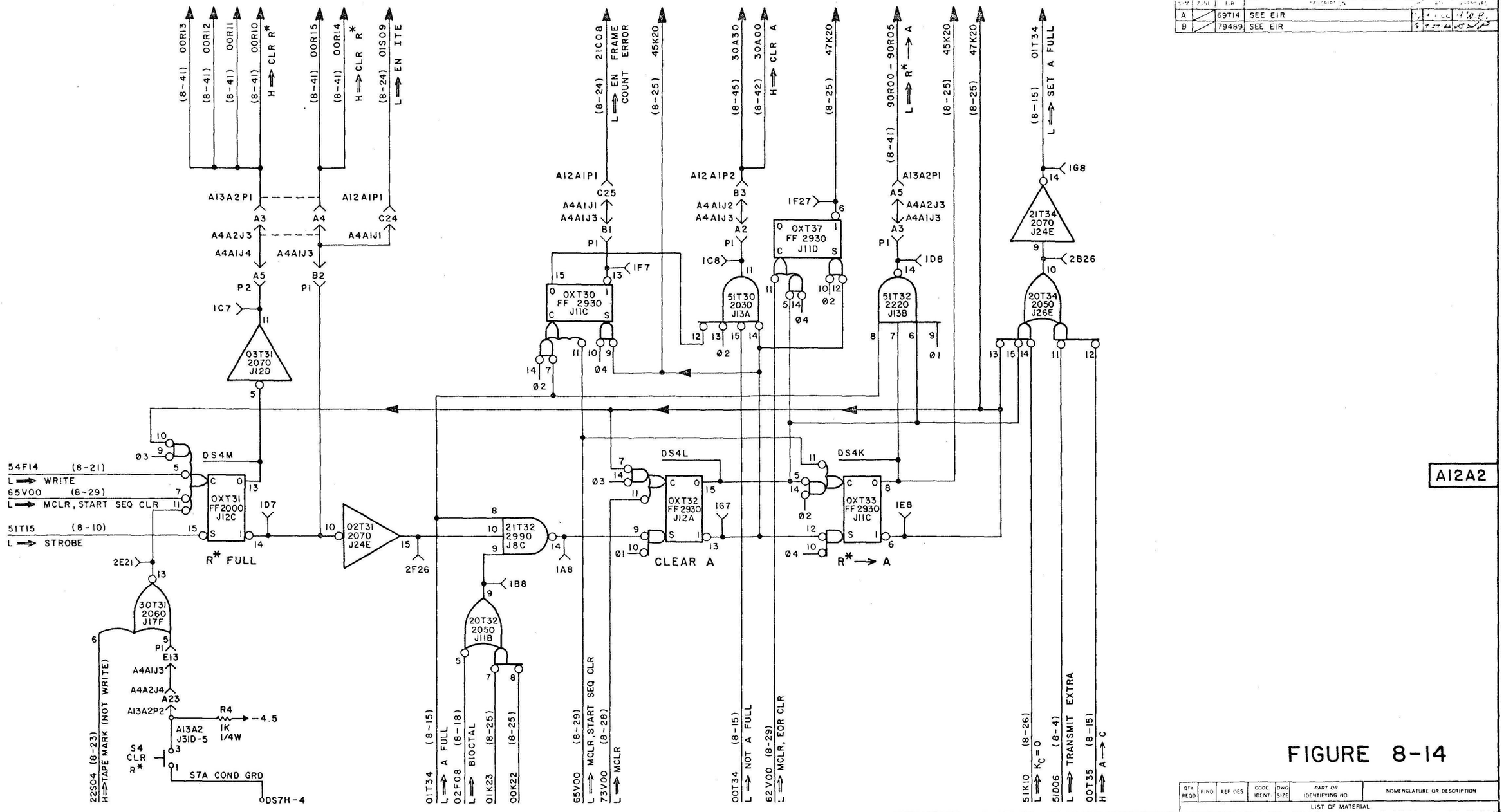

A12A2

FIGURE 8-14

IDENT NO. 7030234-00

LIST OF MATERIAL

QTY REQD	FIND	REF DES	CODE IDENT	DWG SIZE	PART OR IDENTIFYING NO.	NOMENCLATURE OR DESCRIPTION

UNIVAC
DIVISION OF SPERRY RAND CORPORATION

TITLE: FUNCTIONAL SCHEMATIC, BUFFER CONTROL, PART I

CLASS	CODE IDENT NO.	SIZE	DWG NO.
A	90536	D	7030234

SCALE | WEIGHT | SHEET 1 OF 1

UNLESS OTHERWISE SPECIFIED: DIMENSIONS IN INCHES, TOLERANCE ON 2 PLACE DECIMALS ± .03, 3 PLACE ± .005, ANGLES ±, HOLE DIAMETER TOLERANCE: 0 THRU .250 +.003 -.002; .251 THRU .500 +.005 -.003; 501 & LARGER +.010 -.005; THREADS PER MIL-S-8879A INT CL 2B; MATERIAL; FINISH; NEXT ASSY | EQUIPMENT | APPLICATION

	NAME	DATE
LAYOUT		
DRAFTSMAN	J R CURTIS	4-7-65
CHECKER	B. POPOV	10/28/65
ENGINEER	R.D. MCCUMBER	10-28-65
APPROVAL		10-28-65

REVISIONS						
SYM	ZONE	EIR	DESCRIPTION	CHK	DATE	APPROVED

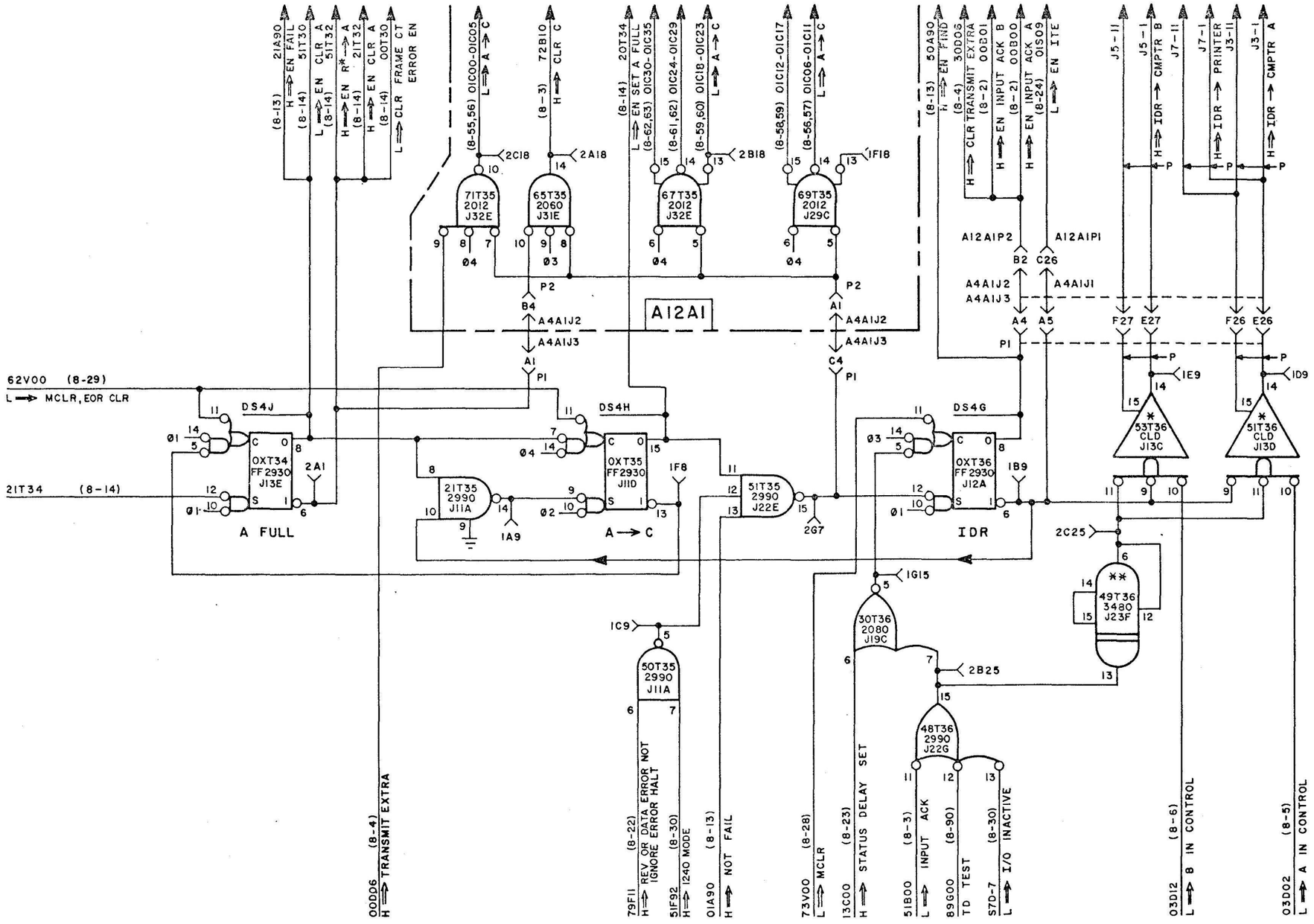

A12A2

NOTES:
1. * CONTROL LINE DRIVERS MODULE TYPE 7002330 FAST INTERFACE AND MODULE TYPE 7002130 FOR SLOW INTERFACE.
2. ** TIME DELAY 1.2 MICROSECONDS FOR FAST INTERFACE, 7 MICROSECONDS FOR SLOW INTERFACE.

FIGURE 8-15

QTY REQD	FIND	REF DES	CODE IDENT	DWG SIZE	PART OR IDENTIFYING NO.	NOMENCLATURE OR DESCRIPTION

LIST OF MATERIAL

IDENT NO. 7030235-00

THIS DOCUMENT CONTAINS CONFIDENTIAL INFORMATION OF THE UNIVAC DIVISION OF SPERRY RAND CORPORATION AND IS FURNISHED PURSUANT TO THE FOLLOWING INSTRUMENT:

ON THE UNDERSTANDING THAT THIS DOCUMENT AND THE INFORMATION THEREON MAY NOT BE DEALT WITH IN ANY MANNER EXCEPT FOR THE PURPOSES OF THAT INSTRUMENT OR AS OTHERWISE PERMITTED IN WRITING BY THE UNIVAC DIVISION OF SPERRY RAND CORPORATION.

UNLESS OTHERWISE SPECIFIED
DIMENSION IN INCHES TOLERANCE ON 2 PLACE DECIMALS ±, 3 PLACE DECIMALS ±, ANGLES ±
HOLE DIAMETER TOLERANCE: 0 THRU 250 +.003 −.002; 251 THRU 500 +.005 −.003; 501 & LARGER +.010 −.005
THREADS EXT CL 2A, INT CL 2B
MATERIAL
FINISH
NEXT ASSY | EQUIPMENT
APPLICATION
COMMODITY CODE

LAYOUT		DATE
DRAFTSMAN	J R CURTIS	4-8-65
CHECKER	B. POPOV	10-12-65
ENGINEER	R.D. MCGUMBER	10-28-65
APPROVAL		

CLASS A

UNIVAC
DIVISION OF SPERRY RAND CORPORATION

TITLE
FUNCTIONAL SCHEMATIC, BUFFER CONTROL, PART 2

CODE IDENT NO.	SIZE	DWG NO.
90536	D	7030235

SCALE | WEIGHT | SHEET 1 OF 1

REVISIONS						
SYM	ZONE	EIR	DESCRIPTION	CHK	DATE	APPROVED
A		69705	SEE EIR		3-11-64	J.B.
B		75711	SEE EIR		3-26-64	A.W.B.
C		77792	SEE EIR		6-22-66	

A12A2

FIGURE 8-16

QTY REQD	FIND	REF DES	CODE IDENT	DWG SIZE	PART OR IDENTIFYING NO.	NOMENCLATURE OR DESCRIPTION

LIST OF MATERIAL

IDENT NO. 7030259-00

THIS DOCUMENT CONTAINS CONFIDENTIAL INFORMATION OF THE UNIVAC DIVISION OF SPERRY RAND CORPORATION AND IS FURNISHED PURSUANT TO THE FOLLOWING INSTRUMENT.

ON THE UNDERSTANDING THAT THIS DOCUMENT AND THE INFORMATION CONTAINED MAY NOT BE DEALT WITH IN ANY MANNER EXCEPT FOR THE PURPOSES OF THAT INSTRUMENT UNLESS OTHERWISE PERMITTED IN WRITING BY THE UNIVAC DIVISION OF SPERRY RAND CORPORATION

UNLESS OTHERWISE SPECIFIED
DIMENSION IN INCHES. TOLERANCE ON 2 PLACE DECIMALS ±, 3 PLACE DECIMALS ±, ANGLES ±
HOLE DIAMETER TOLERANCE: 0 THRU .250 +.003 −.002; .251 THRU .500 +.005 −.003; .501 & LARGER +.010 −.005
THREADS EXCEL 2A, INT CL 2B
MATERIAL
FINISH
NEXT ASSY | EQUIPMENT
APPLICATION
COMMODITY CODE

		DATE
LAYOUT		
DRAFTSMAN	J R CURTIS	5-8-65
CHECKER	B. POPOV	5/8/65
ENGINEER	R.D. MCCUMBER	5-8-65
APPROVAL		10 AUG 65

CLASS A

UNIVAC
DIVISION OF SPERRY RAND CORPORATION

TITLE
FUNCTIONAL SCHEMATIC, END OF RECORD

CODE IDENT NO.	SIZE	DWG NO.
90536	D	7030259

SCALE | WEIGHT | SHEET 1 OF 1

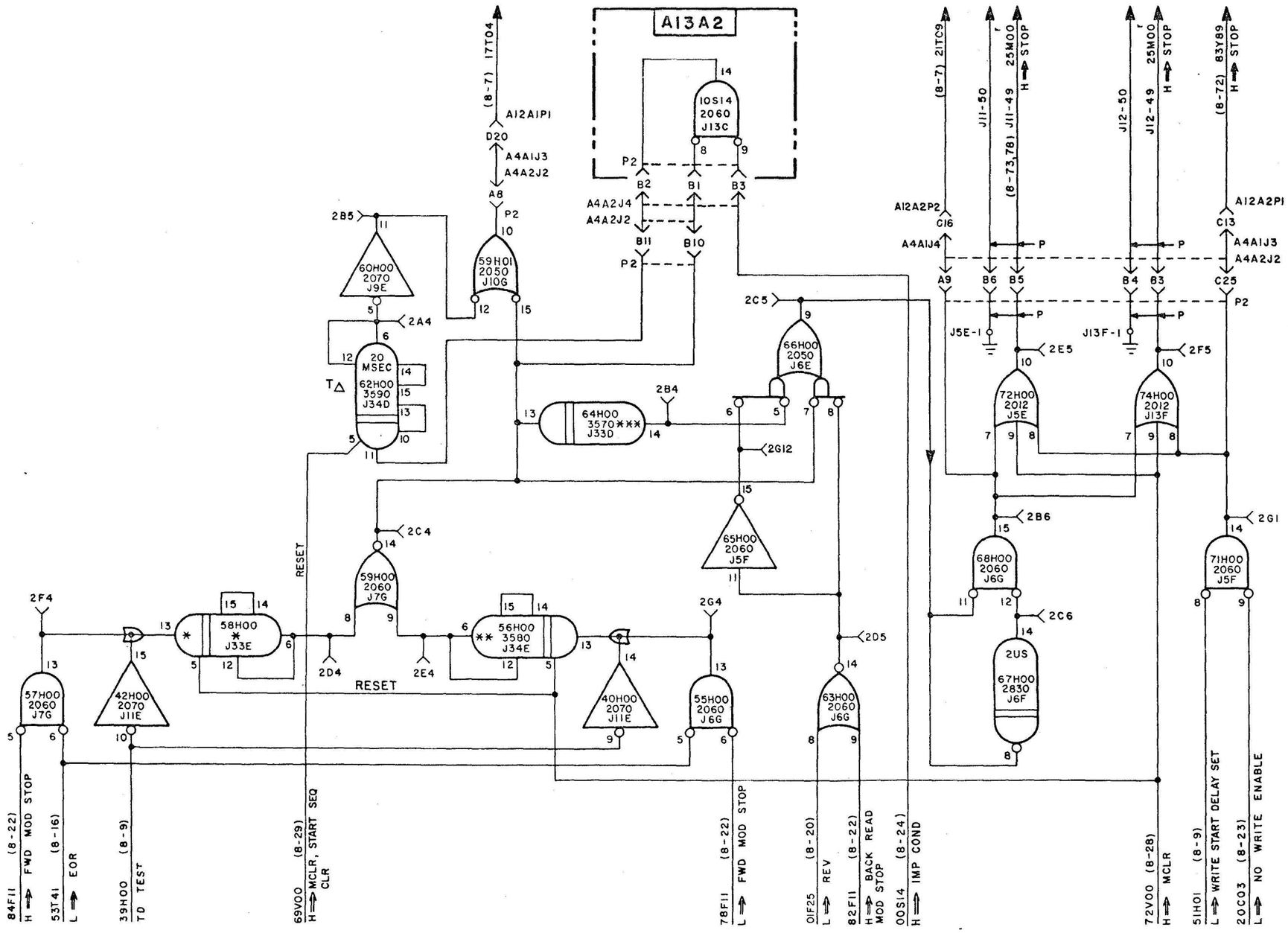

REPRODUCED FROM UNIVAC DWG NO 7030260 REV D.

NOTES:
1. JACK J11 CONNECTS BY JUMPER CABLE TO JACK J1 OF TAPE HANDLER TO LEFT OF MAGNETIC TAPE CONTROL. REFER TO INTERCONNECTION DIAGRAM FIGURE 2-9.
2. JACK J12 CONNECTS BY JUMPER CABLE TO JACK J1 OF TAPE HANDLER TO RIGHT OF MAGNETIC TAPE CONTROL. REFER TO INTERCONNECTION DIAGRAM FIGURE 2-9.

*

MTU	HANDLER	DELAY	MODULE TYPE
1540	POTTER	2.0 MSEC	3580
1541	POTTER	0.125 MSEC	3570
1541	AMPEX	0.125 MSEC	3570

**

MTU	HANDLER	DELAY
1540	POTTER	4.1 MSEC
1541	POTTER	2.0 MSEC
1541	AMPEX	2.4 MSEC

***

MTU	HANDLER	DELAY
1540	POTTER	1.08 MSEC
1541	POTTER	0.60 MSEC
1541	AMPEX	0.94 MSEC

A13A1
A13A2

Figure 8-17. Stop Delays, Functional Schematic

REVISED AUGUST 7, 1972

REVISIONS						
SYM	ZONE	EIR	DESCRIPTION	BY	DATE	APPROVED
A		90495	SEE EIR		4-5-67	
B		92183	SEE EIR		4-26-67	
C		100441	SEE EIR		8-21-67	

A12A2

NOTE:
1. JACK J11 CONNECTS (VIA JUMPER CABLE) TO JACK J1 OF TAPE HANDLER TO LEFT OF MAGNETIC TAPE CONTROL (REFER TO INTERCONNECTION DIAGRAM FIGURE 2-9).
2. JACK J12 CONNECTS (VIA JUMPER CABLE) TO JACK J1 OF TAPE HANDLER TO RIGHT OF MAGNETIC TAPE CONTROL (REFER TO INTERCONNECTION DIAGRAM FIGURE 2-9).

FIGURE 8-18

IDENT NO. 7030251-00

QTY REQD	F-NO	REF DES	CODE IDENT	DWG SIZE	PART OR IDENTIFYING NO.	NOMENCLATURE OR DESCRIPTION

LIST OF MATERIAL

LAYOUT		DATE	
DRAFTSMAN J R CURTIS		4-28-65	
CHECKER B. POPOV	BP	6/28/65	
ENGINEER R.D.MCCUMBER	RDM	6-28-65	
APPROVAL K. Hensley		6-28-65	

CLASS A

UNIVAC
DIVISION OF SPERRY RAND CORPORATION

TITLE
FUNCTIONAL SCHEMATIC, FUNCTION REGISTER, PART I

CODE IDENT NO.	SIZE	DWG NO.
90536	D	7030251

SCALE | WEIGHT | SHEET 1 OF 1

REVISIONS						
SYM	ZONE	EIR	DESCRIPTION	BY	DATE	APPROVED
A		69701	SEE EIR			

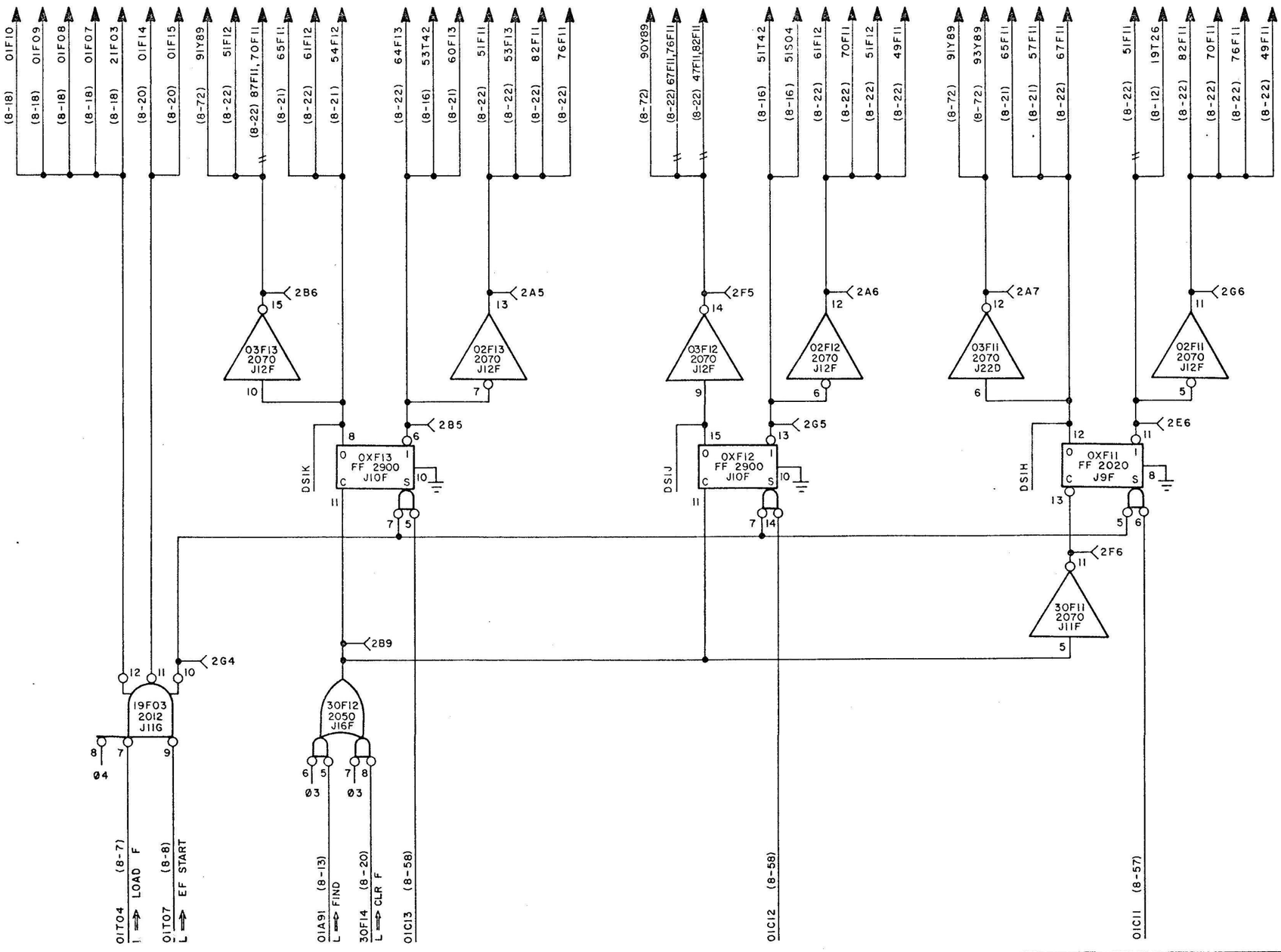

A12A2

FIGURE 8-19

QTY REQD	FIND	REF DES	CODE IDENT	DWG SIZE	PART OR IDENTIFYING NO.	NOMENCLATURE OR DESCRIPTION

LIST OF MATERIAL

IDENT NO. 7030252-00

UNIVAC
DIVISION OF SPERRY RAND CORPORATION

TITLE: FUNCTIONAL SCHEMATIC, FUNCTION REGISTER, PART 2

CLASS	CODE IDENT NO.	SIZE	DWG NO.
A	90536	D	7030252

SCALE — WEIGHT — SHEET 1 OF 1

LAYOUT		DATE
DRAFTSMAN J R CURTIS		42965
CHECKER B. POPOV	VOB BP	10/28/65
ENGINEER R.D.MCCUMBER	R.D.M.	10-28-65
APPROVAL		

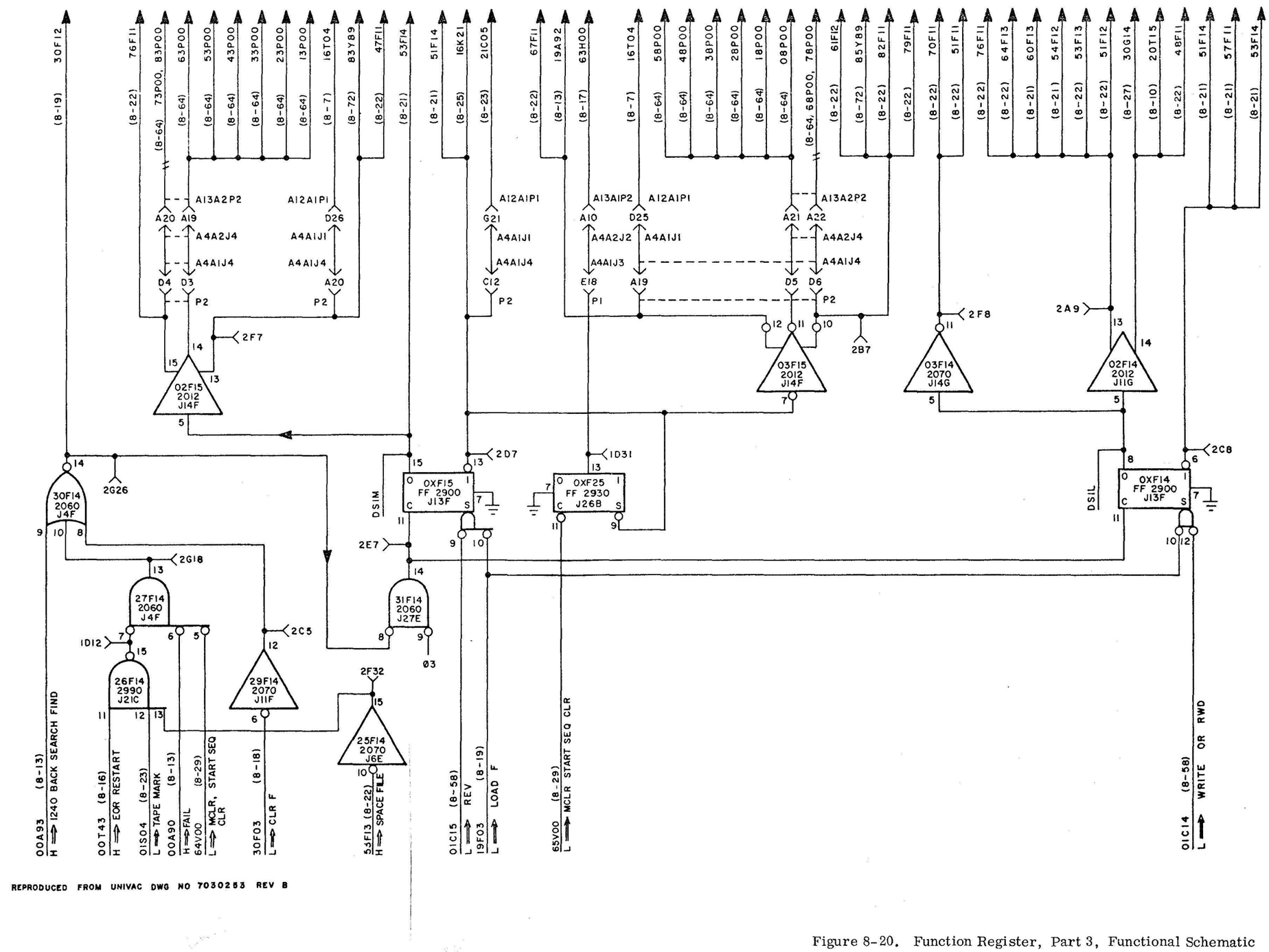

REPRODUCED FROM UNIVAC DWG NO 7030253 REV B

Figure 8-20. Function Register, Part 3, Functional Schematic

REVISIONS					
LTR	ZONE	ECO	DESCRIPTION	DATE	APPROVED
A		69703	SEE EIR	2-1-66	D.W.B.
B		75711	SEE EIR	4-26-66	D.W.B.
C		90495	SEE EIR	4-5-67	D.W.B.

A12A2

FIGURE 8-21

IDENT NO. 7030254-00

QTY REQD	FIND	REF DES	CODE IDENT	DWG SIZE	PART OR IDENTIFYING NO.	NOMENCLATURE OR DESCRIPTION

LIST OF MATERIAL

UNIVAC
DIVISION OF SPERRY RAND CORPORATION

LAYOUT		DATE
DRAFTSMAN J R CURTIS		4-30-65
CHECKER B. POPOV		10/28/65
ENGINEER R.D.MCCUMBER		10-28-65
APPROVAL		10-28-65

CLASS A

TITLE
FUNCTIONAL SCHEMATIC,
FUNCTION TRANSLATOR, PART 1

CODE IDENT NO.	SIZE	DWG NO.
90536	D	7030254

SCALE | WEIGHT | SHEET 1 OF 1

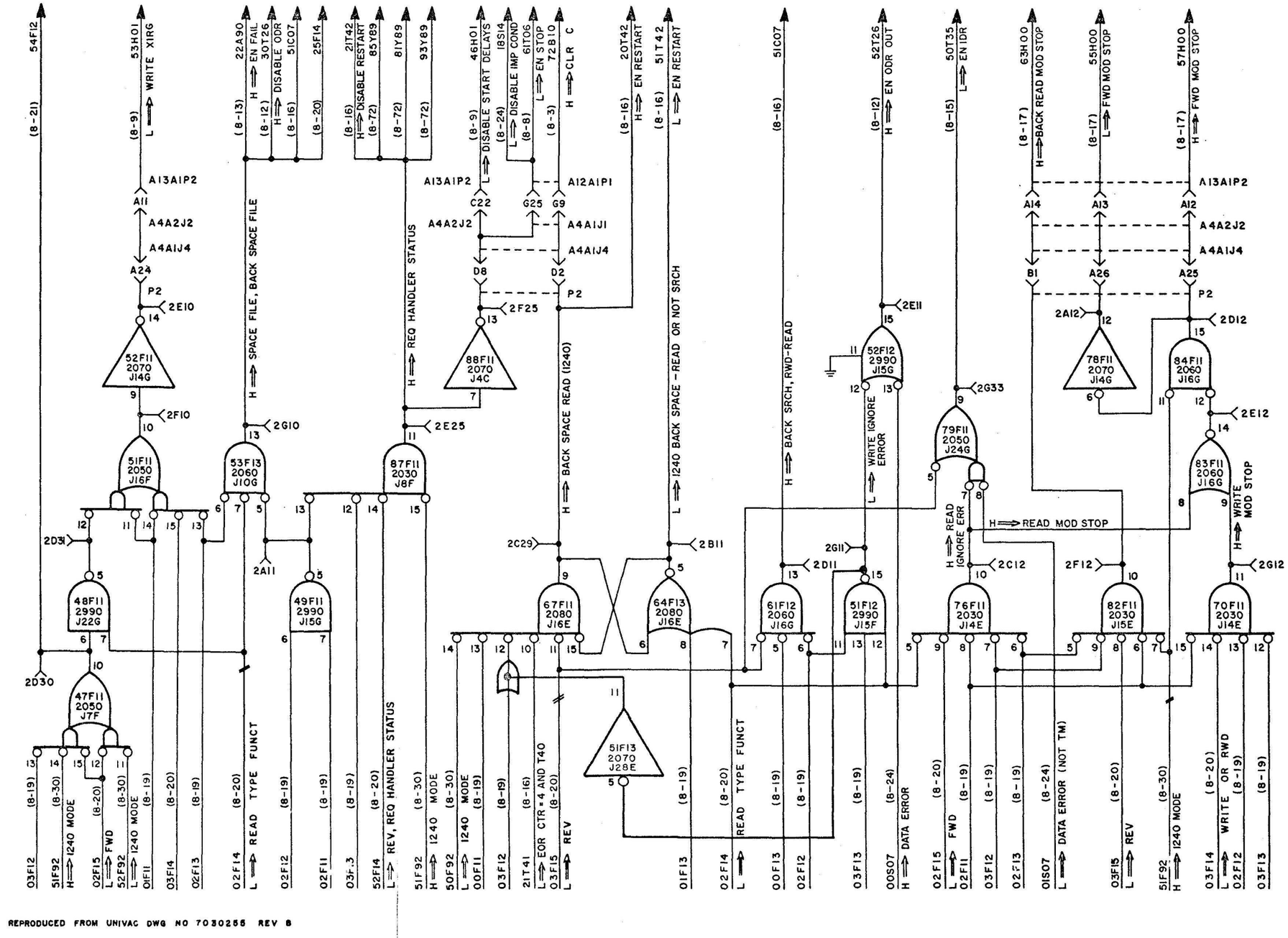

REPRODUCED FROM UNIVAC DWG NO 7030255 REV 8

Figure 8-22. Function Translator, Part 2, Functional Schematic

REVISIONS						
SYM	ZONE	EIR	DESCRIPTION	DR	DATE	APPROVED
A		69705	SEE EIR		3 11 65	J.W.B
B		75774	SEE EIR		4-27-66	J.W.B.
C		77792	SEE EIR		6-23-66	
D		79489	SEE EIR		8-28-66	
E		77224	SEE EIR		2-17-67	
F		92183	SEE EIR		4-6-67	ROS

A12A1

FIGURE 8-23

IDENT NO. 7030257-00

THIS DOCUMENT CONTAINS CONFIDENTIAL INFORMATION OF THE UNIVAC DIVISION OF SPERRY RAND CORPORATION AND IS FURNISHED PURSUANT TO THE FOLLOWING INSTRUMENT:

ON THE UNDERSTANDING THAT THIS DOCUMENT AND THE INFORMATION THEREIN SHALL BE HELD IN CONFIDENCE AND NOT DISCLOSED TO OTHERS UNLESS THAT INSTRUMENT SHALL OTHERWISE PROVIDE OR IN WRITING BY THE UNIVAC DIVISION OF SPERRY RAND CORPORATION

QTY REQD	FIND	REF DES	CODE IDENT	DWG SIZE	PART OR IDENTIFYING NO.	NOMENCLATURE OR DESCRIPTION

LIST OF MATERIAL

UNLESS OTHERWISE SPECIFIED
DIMENSION IN INCHES. TOLERANCE ON
2 PLACE DECIMALS ± | 3 PLACE DECIMALS ± | ANGLES ±
HOLE DIAMETER TOLERANCE
0 THRU .250 +.003 −.002 | .251 THRU .500 +.005 −.005 | .501 & LARGER +.010 −.005
THREADS: EXT CL 2A, INT CL 2B
MATERIAL
FINISH
NEXT ASSY | EQUIPMENT
APPLICATION
COMMODITY CODE

		DATE
LAYOUT		
DRAFTSMAN J R CURTIS		5-18-65
CHECKER B. POPOV	VDB BP	4/28/66
ENGINEER R.D. MCCUMBER	R.D.M.	10-28-65
APPROVAL		10-28-65

CLASS A

UNIVAC
DIVISION OF SPERRY RAND CORPORATION

TITLE: FUNCTIONAL SCHEMATIC, STATUS REGISTER AND STATUS GATES, PART 1

CODE IDENT NO.	SIZE	DWG NO.
90536	D	7030257

SCALE | WEIGHT | SHEET 1 OF 1

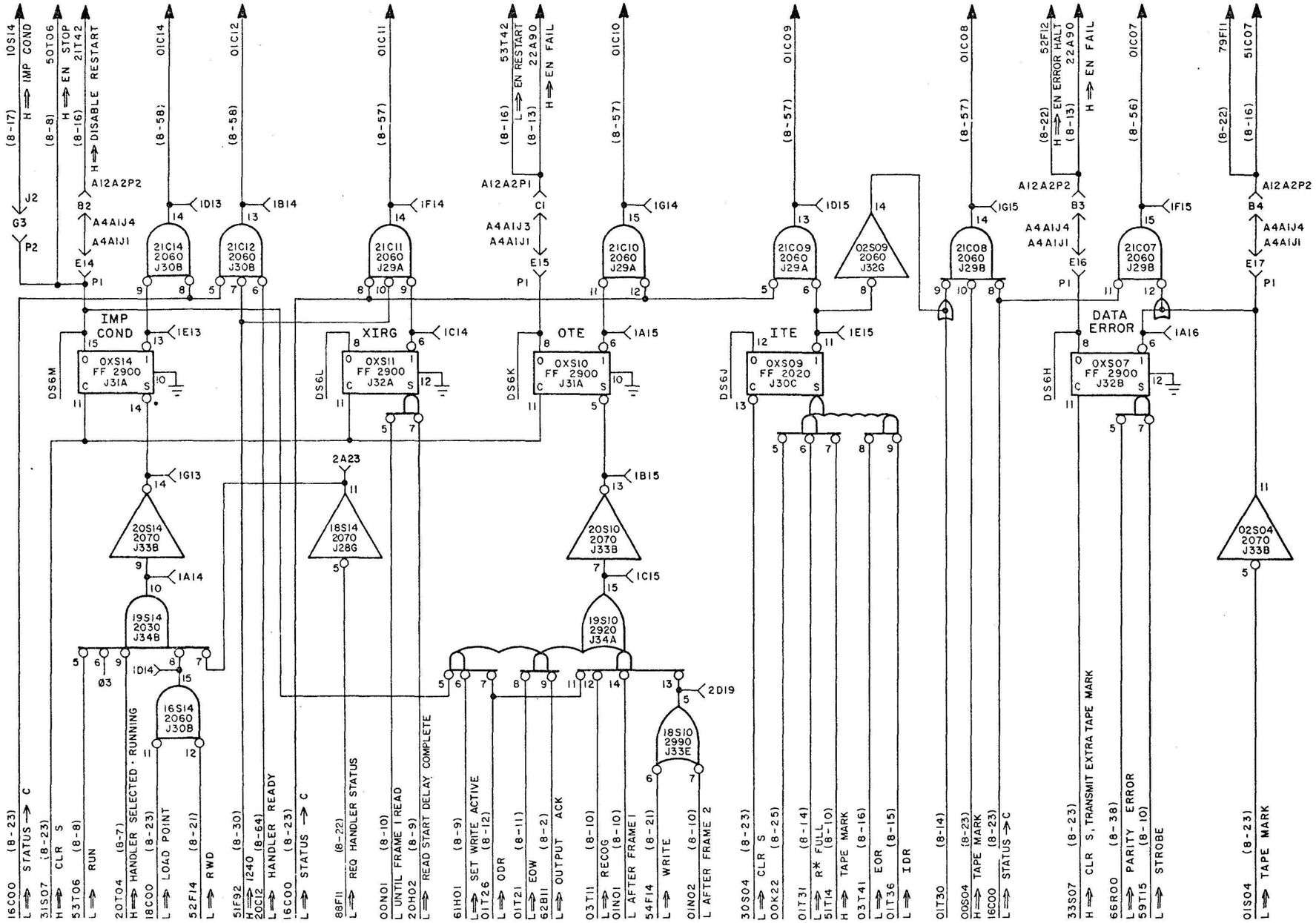

REPRODUCED FROM UNIVAC DWG NO 7030258 REV B.

Figure 8-24. Status Register and Status Gates, Part 2, Functional Schematic

REVISED AUGUST 7, 1972

REVISIONS					
LTR	ZONE	EIR	DESCRIPTION	BY	DATE	APPROVED
A		69703	SEE EIR			
B		79489	SEE EIR		9-27-64	

A12A2

FIGURE 8-25

IDENT NO. 7030242-00

QTY REQD	FIND	REF DES	CODE IDENT	DWG SIZE	PART OR IDENTIFYING NO.	NOMENCLATURE OR DESCRIPTION

LIST OF MATERIAL

UNIVAC
DIVISION OF SPERRY RAND CORPORATION

TITLE: FUNCTIONAL SCHEMATIC, CHARACTER CONTROL

CLASS	CODE IDENT NO.	SIZE	DWG NO.
A	90536	D	7030242

SCALE | WEIGHT | SHEET 1 OF 1

UNLESS OTHERWISE SPECIFIED: DIMENSION IN INCHES TOLERANCE ON 2 PLACE DECIMALS ± 3 PLACE DECIMALS ± ANGLES ±. HOLE DIAMETER TOLERANCE: 0 THRU 250 .003 .002; 251 THRU 500 .010 .005; 501 & LARGER .010 .005. THREADS EXTERNAL INT CL 2B. MATERIAL. FINISH. NEXT ASSY | EQUIPMENT. APPLICATION. DO NOT SCALE.

LAYOUT. DRAFTSMAN: J R CURTIS 4-22-65. CHECKER: B. POPOV. ENGINEER: R.D. MCCUMBER 10-28-65. APPROVAL: 10-28-65. DATE.

REVISIONS						
SYM	ZONE	EIR	DESCRIPTION	CHA	DATE	APPROVED

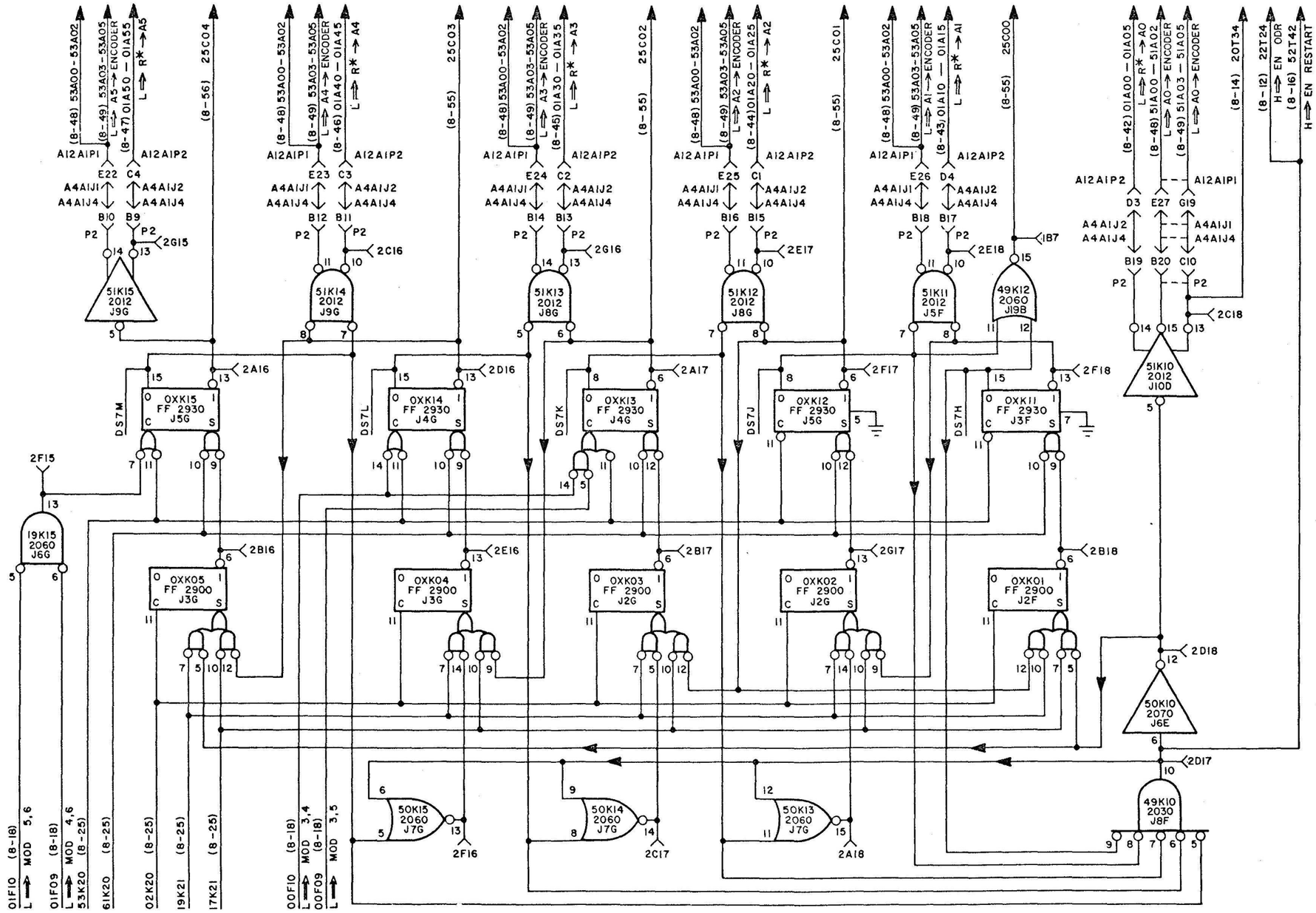

A12A2

FIGURE 8-26

QTY REQD	FIND	REF DES	CODE IDENT	DWG SIZE	PART OR IDENTIFYING NO.	NOMENCLATURE OR DESCRIPTION

LIST OF MATERIAL

IDENT NO. 7030243-00

THIS DOCUMENT CONTAINS CONFIDENTIAL INFORMATION OF THE UNIVAC DIVISION OF SPERRY RAND CORPORATION AND IS FURNISHED PURSUANT TO THE FOLLOWING INSTRUMENT.

ON THE UNDERSTANDING THAT THIS DOCUMENT AND THE INFORMATION THEREON, MAY NOT BE DEALT WITH IN ANY MANNER EXCEPT FOR THE PURPOSES OF THAT INSTRUMENT OR AS OTHERWISE PERMITTED IN WRITING BY THE UNIVAC DIVISION OF SPERRY RAND CORPORATION.

UNLESS OTHERWISE SPECIFIED
DIMENSION IN INCHES TOLERANCE ON
2 PLACE DECIMALS ± | 3 PLACE DECIMALS ± | ANGLES ±
HOLE DIAMETER TOLERANCE
0 THRU .250 +.003 −.002 | .251 THRU .500 +.005 −.003 | .501 & LARGER +.010 −.005
THREADS EXTERNAL, INT CL 2B
MATERIAL
FINISH
NEXT ASSY | EQUIPMENT
APPLICATION
COMMODITY CODE

	NAME	DATE
LAYOUT		
DRAFTSMAN	J R CURTIS	4-26-65
CHECKER	B. POPOV	10/28/65
ENGINEER	R.D. MCCUMBER	10-28-65
APPROVAL		10-28-65

CLASS A

UNIVAC
DIVISION OF SPERRY RAND CORPORATION

TITLE
FUNCTIONAL SCHEMATIC, CHARACTER COUNTER

CODE IDENT NO.	SIZE	DWG NO.
90536	D	7030243

SCALE | WEIGHT | SHEET 1 OF 1

REVISIONS						
LTR	ZONE	E/R	DESCRIPTION	BY	DATE	APPROVED
A		69703	SEE EIR		11-1-66	O.W.B.

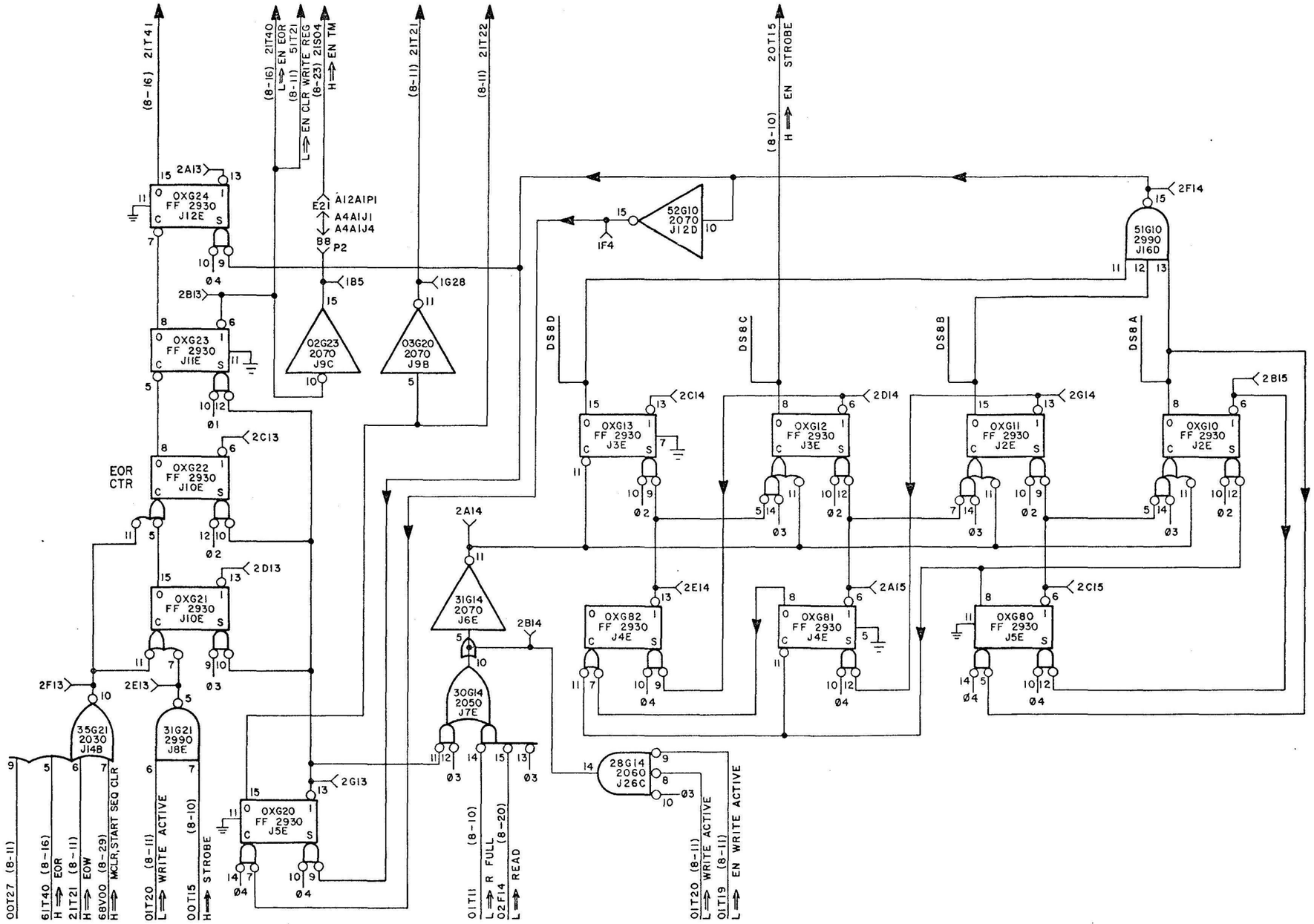

A12A2

FIGURE 8-27

IDENT NO. 7030231-00

QTY REQD	FIND	REF DES	CODE IDENT	DWG SIZE	PART OR IDENTIFYING NO.	NOMENCLATURE OR DESCRIPTION

LIST OF MATERIAL

UNIVAC
DIVISION OF SPERRY RAND CORPORATION

TITLE
FUNCTIONAL SCHEMATIC, FRAME TIME GENERATOR

		DATE
LAYOUT		
DRAFTSMAN	J R CURTIS	4-7-65
CHECKER	B. POPOV	10/28/65
ENGINEER	R.D. MCCUMBER	10-28-65
APPROVAL		10/28/65

UNLESS OTHERWISE SPECIFIED
DIMENSION IN INCHES TOLERANCE ON
2 PLACE DECIMALS ± .03
3 PLACE DECIMALS ± .010
ANGLES ± 1°
HOLE DIAMETER TOLERANCE
0 THRU 250 ± .003
251 THRU 500 ± .005
501 & LARGER ± .010
FINISH, EXCEPT A INT CL 2R
MATERIAL
NEXT ASSY EQUIPMENT
APPLICATION
COMMODITY CODE
FINISH

CLASS	CODE IDENT NO.	SIZE	DWG NO.
A	90536	D	7030231

SCALE — WEIGHT — SHEET 1 OF 1

REVISIONS						
SYM	ZONE	EIR	DESCRIPTION	CHK	DATE	APPROVED
A		69705	SEE EIR			
B		100441	SEE EIR		8-21-67	

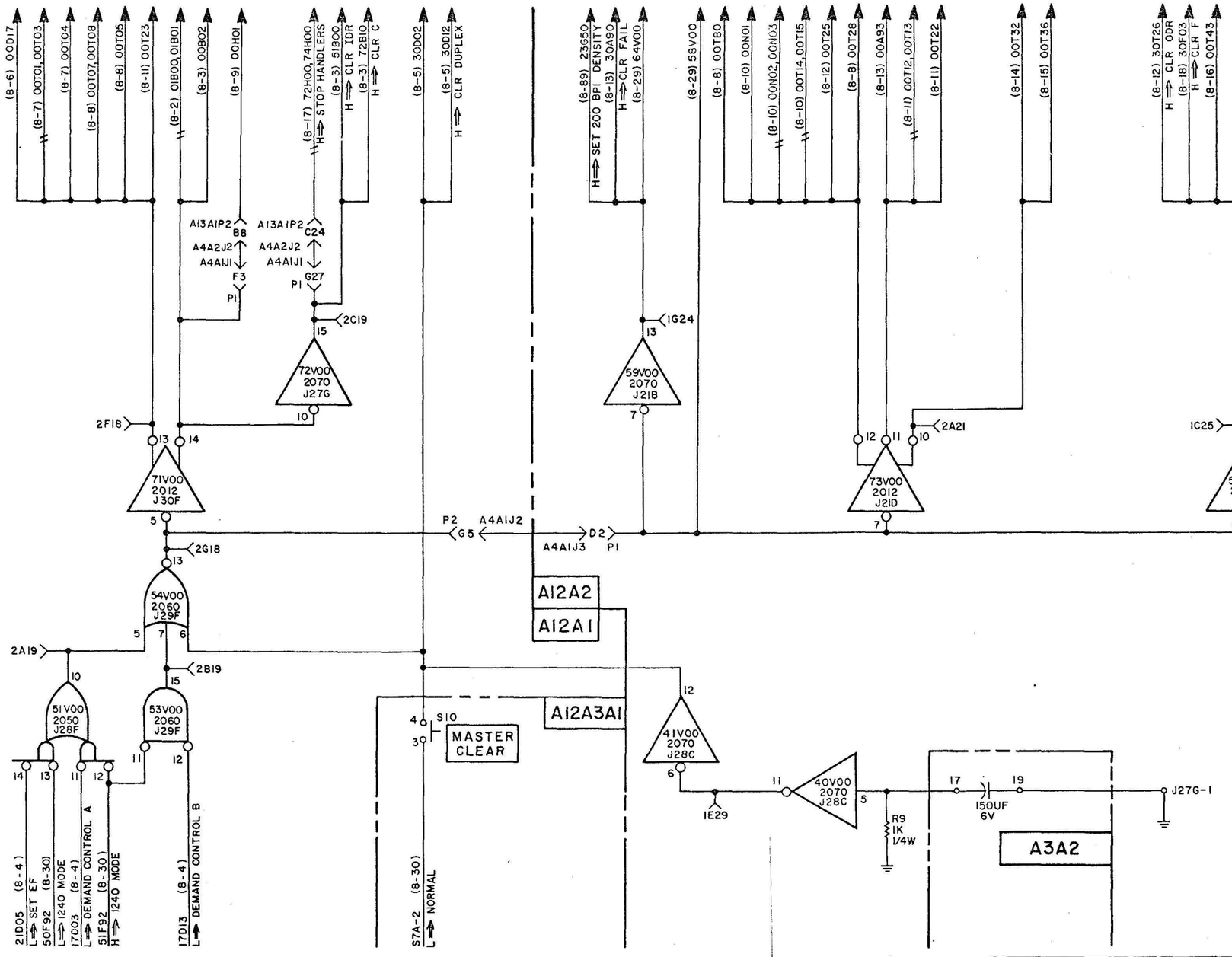

FIGURE 8-28

QTY REQD	FIND	REF DES	CODE IDENT	DWG SIZE	PART OR IDENTIFYING NO.	NOMENCLATURE OR DESCRIPTION

LIST OF MATERIAL

IDENT NO. 7030267-00

THIS DOCUMENT CONTAINS CONFIDENTIAL INFORMATION OF THE UNIVAC DIVISION OF SPERRY RAND CORPORATION AND IS FURNISHED PURSUANT TO THE FOLLOWING INSTRUMENT.

ON THE UNDERSTANDING THAT THIS DOCUMENT AND THE INFORMATION THEREIN MAY NOT BE DEALT WITH IN ANY MANNER EXCEPT FOR THE PURPOSES OF THAT INSTRUMENT OR AS OTHERWISE PERMITTED IN WRITING BY THE UNIVAC DIVISION OF SPERRY RAND CORPORATION.

UNLESS OTHERWISE SPECIFIED
DIMENSION IN INCHES. TOLERANCE ON
2 PLACE DECIMALS ± | 3 PLACE DECIMALS ± | ANGLES ±
HOLE DIAMETER TOLERANCE
0 THRU .250 +.003 −.002 | .251 THRU .500 +.005 −.003 | .501 & LARGER +.010 −.005
THREADS: EXT CL 2A, INT CL 2B
MATERIAL
FINISH
NEXT ASSY | EQUIPMENT
APPLICATION
COMMODITY CODE

		DATE
LAYOUT		
DRAFTSMAN	D.R.MUHS	5-25-65
CHECKER	B. POPOV	10-28-65
ENGINEER	R.D.MCCUMBER	10-28-65
APPROVAL		10-28-65

CLASS A

UNIVAC
DIVISION OF SPERRY RAND CORPORATION

TITLE
FUNCTIONAL SCHEMATIC, MASTER CLEAR PART 1

CODE IDENT NO.	SIZE	DWG NO.
90536	D	7030267

SCALE | WEIGHT | SHEET 1 OF 1

REVISIONS						
SYM	ZONE	EIR	DESCRIPTION	CHK	DATE	APPROVED
A		69705	SEE EIR			
B		77224	SEE EIR			
C		92063	SEE EIR			
D		100441	SEE EIR			

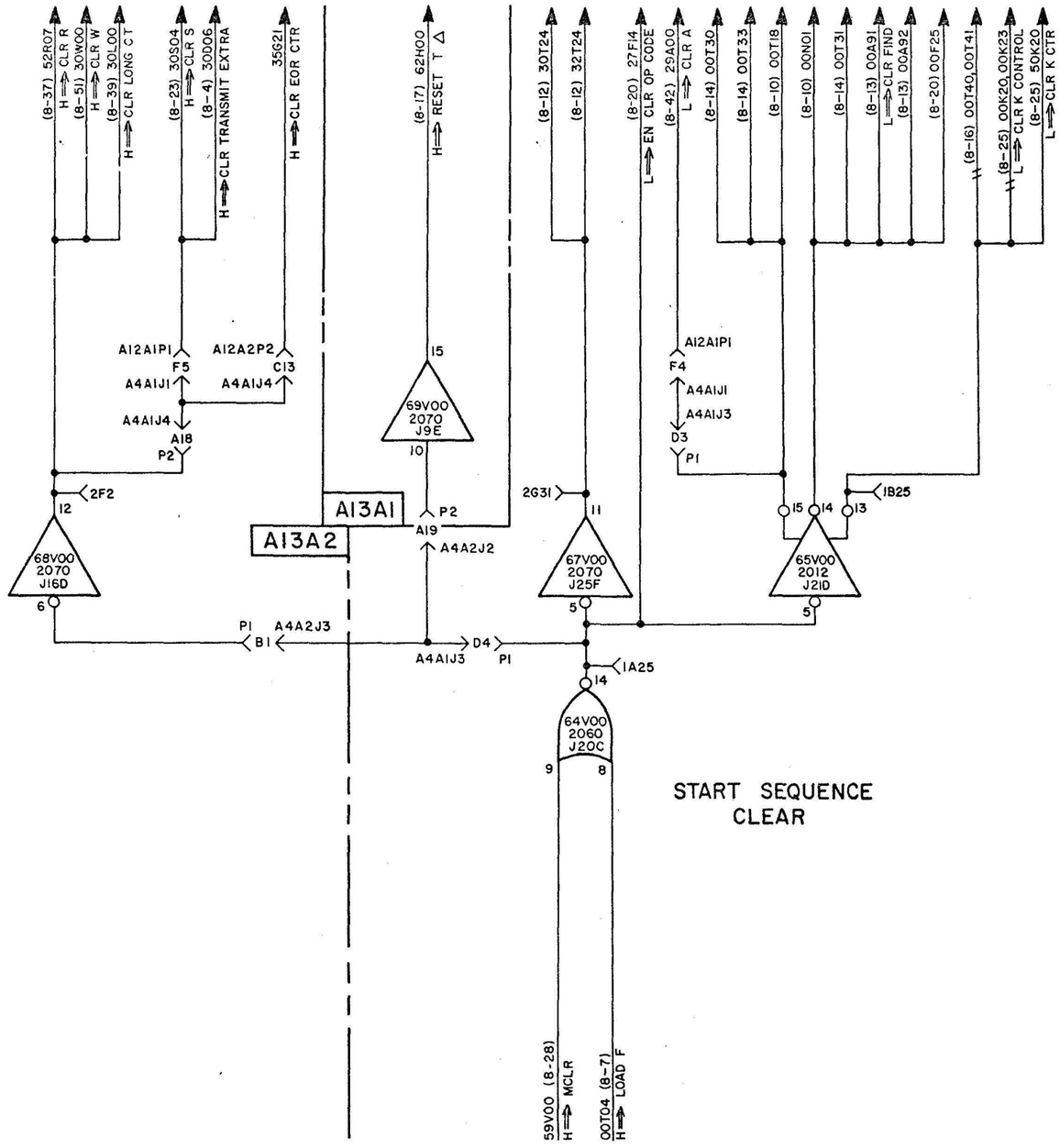

START SEQUENCE CLEAR

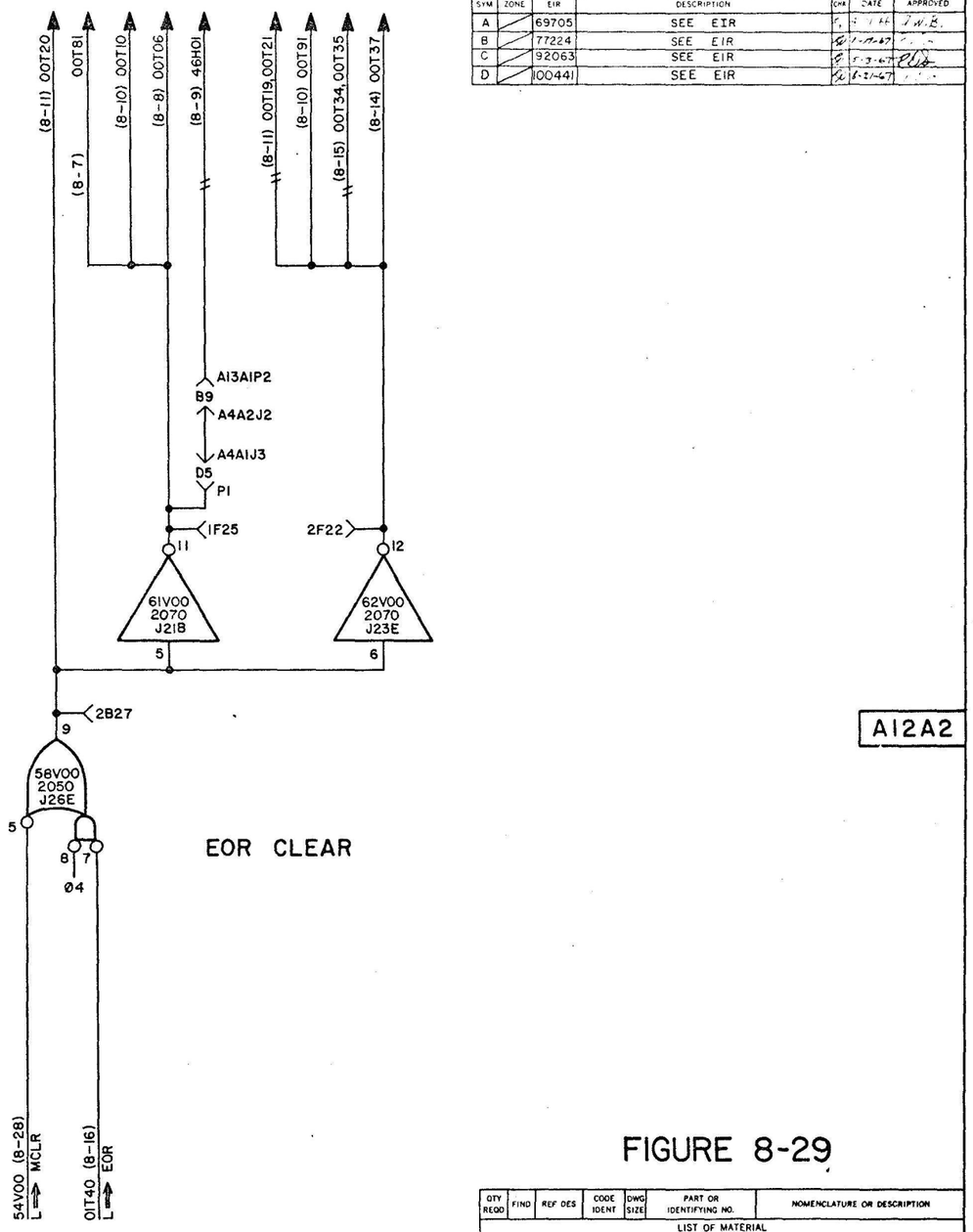

EOR CLEAR

A12A2

FIGURE 8-29

QTY REQD	FIND	REF DES	CODE IDENT	DWG SIZE	PART OR IDENTIFYING NO.	NOMENCLATURE OR DESCRIPTION

LIST OF MATERIAL

IDENT NO. 7030268-00

THIS DOCUMENT CONTAINS CONFIDENTIAL INFORMATION OF THE UNIVAC DIVISION OF SPERRY RAND CORPORATION AND IS FURNISHED PURSUANT TO THE FOLLOWING INSTRUMENT.

ON THE UNDERSTANDING THAT THIS DOCUMENT AND THE INFORMATION THEREON MAY NOT BE DEALT WITH IN ANY MANNER EXCEPT FOR THE PURPOSES OF THAT INSTRUMENT OR AS OTHERWISE PERMITTED IN WRITING BY THE UNIVAC DIVISION OF SPERRY RAND CORPORATION

UNLESS OTHERWISE SPECIFIED
DIMENSION IN INCHES. TOLERANCE ON
2 PLACE DECIMALS ± | 3 PLACE DECIMALS ± | ANGLES ±
HOLE DIAMETER TOLERANCE
0 THRU .250 +.003 −.002 | .251 THRU .500 +.005 −.003 | .501 & LARGER +.010 −.005
THREADS EXT CL 2A, INT CL 2B
MATERIAL
FINISH
NEXT ASSY | EQUIPMENT
APPLICATION
COMMODITY CODE

LAYOUT		DATE
DRAFTSMAN	D.R.MUHS	5-25-65
CHECKER	B. POPOV	
ENGINEER	R.D.MCCUMBER	
APPROVAL		

CLASS A

UNIVAC
DIVISION OF SPERRY RAND CORPORATION

TITLE
FUNCTIONAL SCHEMATIC, MASTER CLEAR PART 2

CODE IDENT NO.	SIZE	DWG NO.
90536	D	7030268

SCALE | WEIGHT | SHEET 1 OF 1

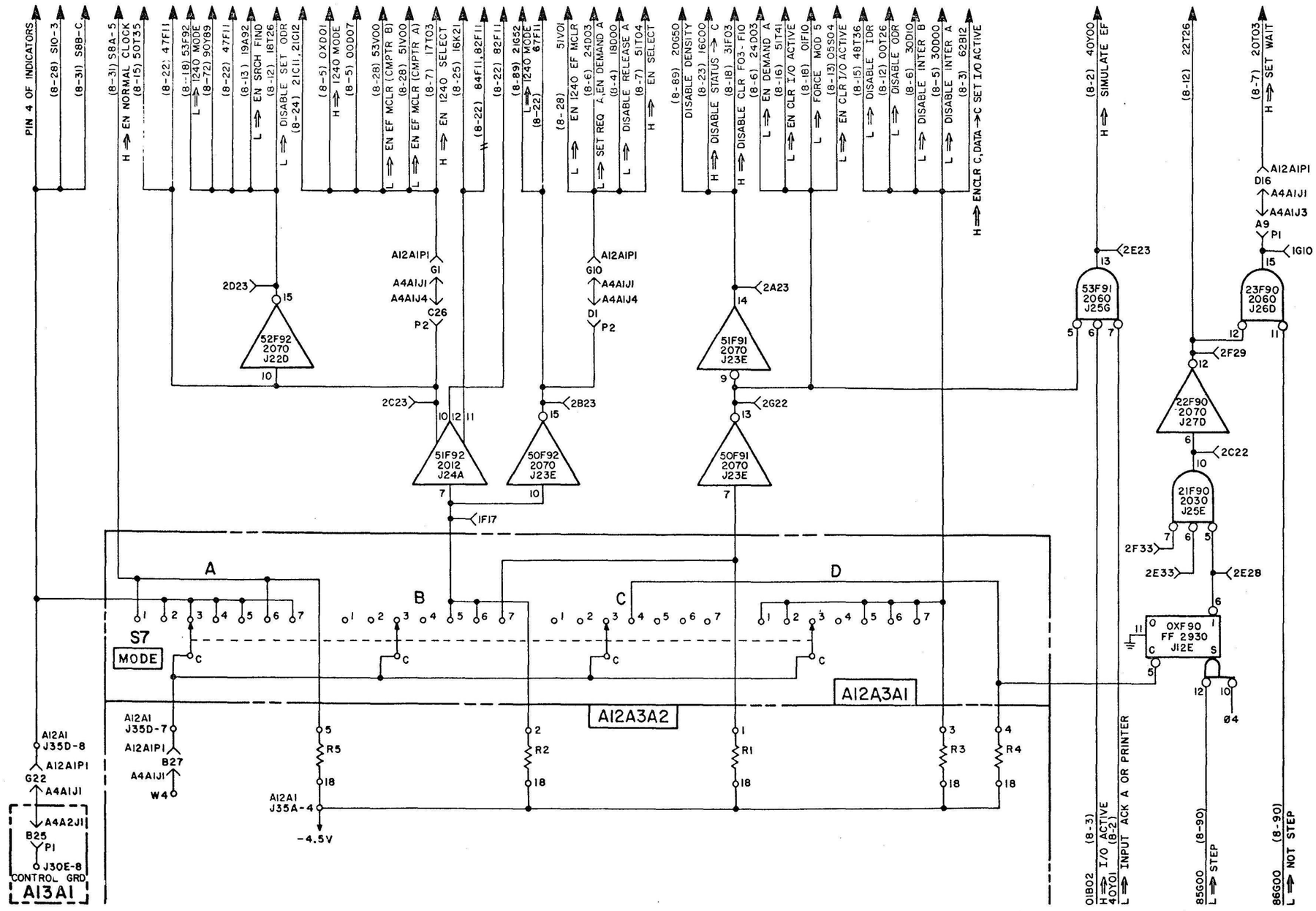

MODE SWITCH		
PIN NO.	POSITION LABEL	FUNCTION
1	NORMAL	NORMAL OPERATION WITH COMPUTER
2	T1	LOCAL OPERATION I/O OPERATIONAL
3	T2	LOCAL OPERATION I/O INACTIVE
4	T3	REPEAT OPERATION
5	T4	1240 LOCAL OPERATION I/O OPERATIONAL
6	1240	1240 PROGRAMMED OPERATION
7	PRINTER	PROVIDES FOR OPERATION WITH PRINTER

REPRODUCED FROM UNIVAC DWG NO 7030269 REV F

Figure 8-30. Console Logic, Functional Schematic

REVISIONS						
SYM	ZONE	EIR	DESCRIPTION	CHK	DATE	APPROVED
A		69703	SEE EIR		1-66	A.W.B.

A13A1

2E10

2E10

2F10

98M00 0070 J14E

99M00 2060 J10E

R4 5.6K 1/4W

R3 5,6K 1/4W

97M00 0850 J13E

SPEED

A13A3A1

CAPACITOR ASSY 1000 J12E

SLOW

FAST

RANGE

A13A3A1

HANDLER TEST OSCILLATOR

(8-90) 03661 L⟹EN NORMAL CLOCK

2B22

50F93 2070 J23E

A12A3A1

A

B

S8

CLOCK CONTROL

CLOCK CONTROL SWITCH	
PIN NO.	POSITION LABEL
1	NORMAL
2	OP STEP
3	Ø STEP
4	MULTI Ø
5	SKEW TEST
6	TD TEST

STA-1 (8-30) H⟹NORMAL OR 1240 MODE

STA-2 (8-30)

(8-90) 90G00 H⟹EN TO TEST

(8-10) 58T15

(8-10) 55T15

H⟹EN SKEW TEST CIRCUITS

(8-91) 49G01 H⟹EN MULTI Ø

A12A2 J35A-4

-4.5V

R6 R14 R8 R7

A12A3A2

(8-7) 21T04 H⟹EN SET LOAD F

A12A1P1

D12

A4A1J1

A4A1J4

C23

P2

2A22

52F94 2990 J22E

(8-8) 21T05 H⟹EN SET START

2G21

54F94 2990 J22E

A12A2

95600 (8-90) L⟹STEP

86G00, S9-5 (8-90) L⟹NOT STEP

FIGURE 8-31

QTY REQD	FIND	REF DES	CODE IDENT	DWG SIZE	PART OR IDENTIFYING NO.	NOMENCLATURE OR DESCRIPTION

LIST OF MATERIAL

IDENT NO. 7030270-00

THIS DOCUMENT CONTAINS CONFIDENTIAL INFORMATION OF THE UNIVAC DIVISION OF SPERRY RAND CORPORATION AND IS FURNISHED PURSUANT TO THE FOLLOWING INSTRUMENT

ON THE UNDERSTANDING THAT THIS DOCUMENT AND THE INFORMATION THEREIN MAY NOT BE DEALT WITH IN ANY MANNER EXCEPT FOR THE P. RPOSES OF THAT INSTRUMENT OR AS OTHERWISE PERMITTED IN WRITING BY THE UNIVAC DIVISION OF SPERRY RAND CORPORATION

UNLESS OTHERWISE SPECIFIED
DIMENSION IN INCHES. TOLERANCE ON 2 PLACE DECIMALS ± | 3 PLACE DECIMALS ± | ANGLES ±
HOLE DIAMETER TOLERANCE: 0 THRU 250 +.003 −.002 | 251 THRU 500 +.005 −.003 | 501 & LARGER +.010 −.005
THREADS: EXT CL 2A, INT CL 2B
MATERIAL
FINISH
NEXT ASSY | EQUIPMENT
APPLICATION
COMMODITY CODE

LAYOUT		DATE
DRAFTSMAN	D.R.MUHS	5-26-65
CHECKER	B. POPOV	10/25/65
ENGINEER	R.D. MCCUMBER	10-28-65
APPROVAL		11-4-65

CLASS A

UNIVAC
DIVISION OF SPERRY RAND CORPORATION

TITLE: FUNCTIONAL SCHEMATIC, CONSOLE LOGIC AND HANDLER TEST OSCILLATOR

CODE IDENT NO.	SIZE	DWG NO.
90536	D	7030270

SCALE | WEIGHT | SHEET 1 OF 1

REVISIONS						
LTR	ZONE	E/R	DESCRIPTION	BY	DATE	APPROVED
A		69704	SEE EIR	K	1 JUL 66	G.W.B

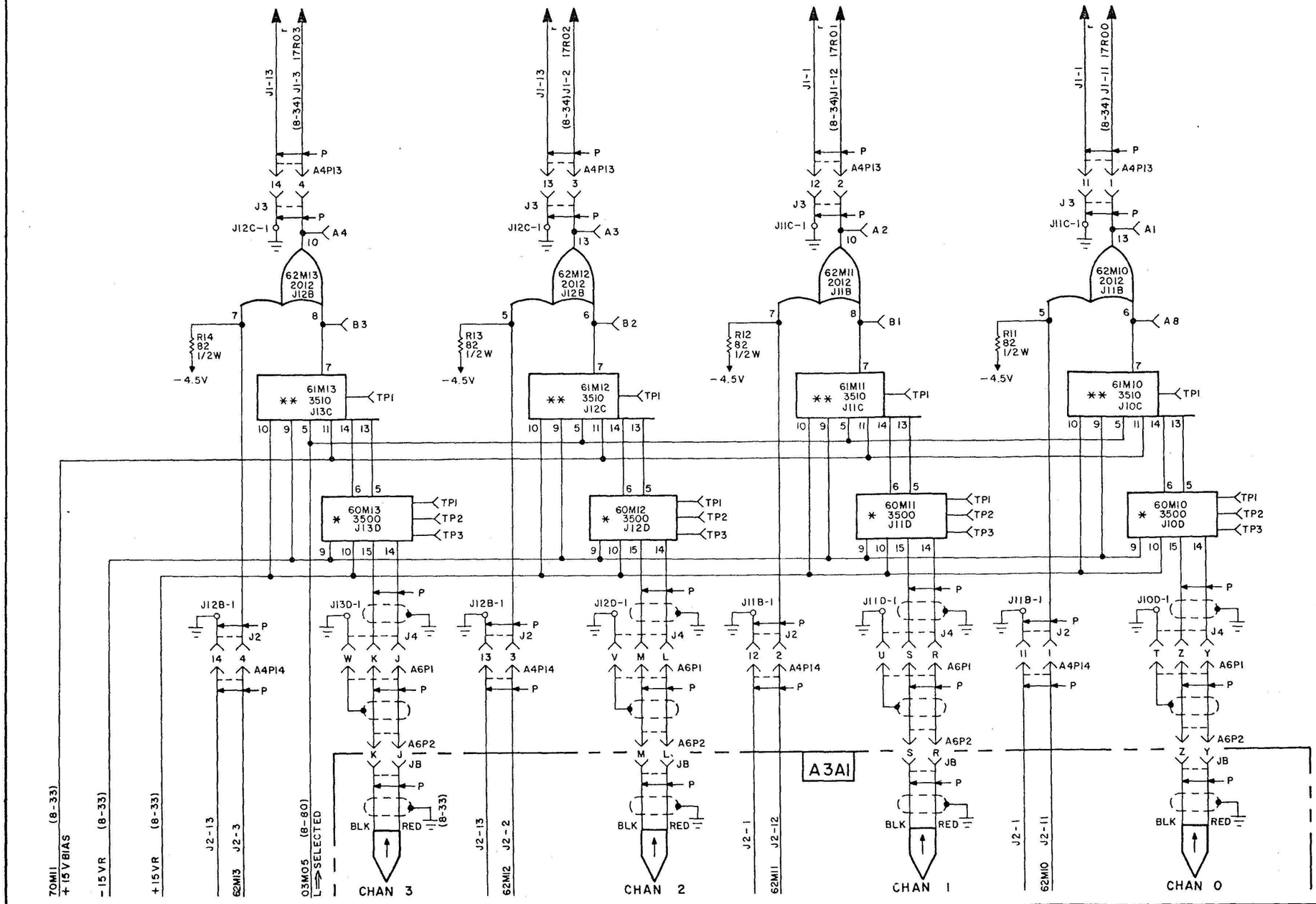

A3A3

NOTES:

1. JACK J2 IS CONNECTED BY JUMPER CABLE TO JACK J1 OF AN ADJACENT TAPE HANDLER. (REFER TO INTERCONNECTION DIAGRAM FIGURE 2-9).
2. JACK J1 IS CONNECTED BY JUMPER CABLE TO J2 OF AN ADJACENT TAPE HANDLER OR TO J11 OR J12 OF MAGNETIC TAPE CONTROL. (REFER TO INTERCONNECTION DIAGRAM FIGURE 2-9).
3. * READ AMPLIFIER MODULE

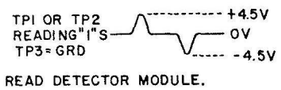

4. ** READ DETECTOR MODULE.

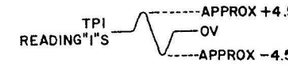

FIGURE 8-32

QTY REQD	FIND	REF DES	CODE IDENT	DWG SIZE	PART OR IDENTIFYING NO.	NOMENCLATURE OR DESCRIPTION

LIST OF MATERIAL

IDENT NO. 7030240-00

UNLESS OTHERWISE SPECIFIED
DIMENSIONS IN INCHES TOLERANCE ON
3 PLACE DECIMALS ± 1 PLACE DECIMALS ± ANGLES
HOLE DIAMETER TOLERANCE
0 THRU .140 .141 THRU .500 .501 & LARGER
.003 .005 .010
.002 .003 .005
THREADS EXTERNAL INT CL 2B
MATERIAL
NEXT ASSY EQUIPMENT
APPLICATION
SECURITY CODE
FINISH

		DATE
LAYOUT		
DRAFTSMAN J.R. CURTIS		4-21-65
CHECKER B. POPOV	VDB BP	10/26/65
ENGINEER R.D. MCCUMBER	R.D.M.	10-28-65
APPROVAL R Hendley		10-28-65

CLASS A

UNIVAC
DIVISION OF SPERRY RAND CORPORATION

TITLE
FUNCTIONAL SCHEMATIC, 1541 READ AMPLIFIERS AND DETECTORS, BITS 0-3

CODE IDENT NO.	SIZE	DWG NO.
90536	D	7030240

SCALE WEIGHT SHEET 1 OF 1

REVISIONS						
SYM	ZONE	EIR	DESCRIPTION	CHK	DATE	APPROVED
A		69704	SEE EIR		7-8-66	

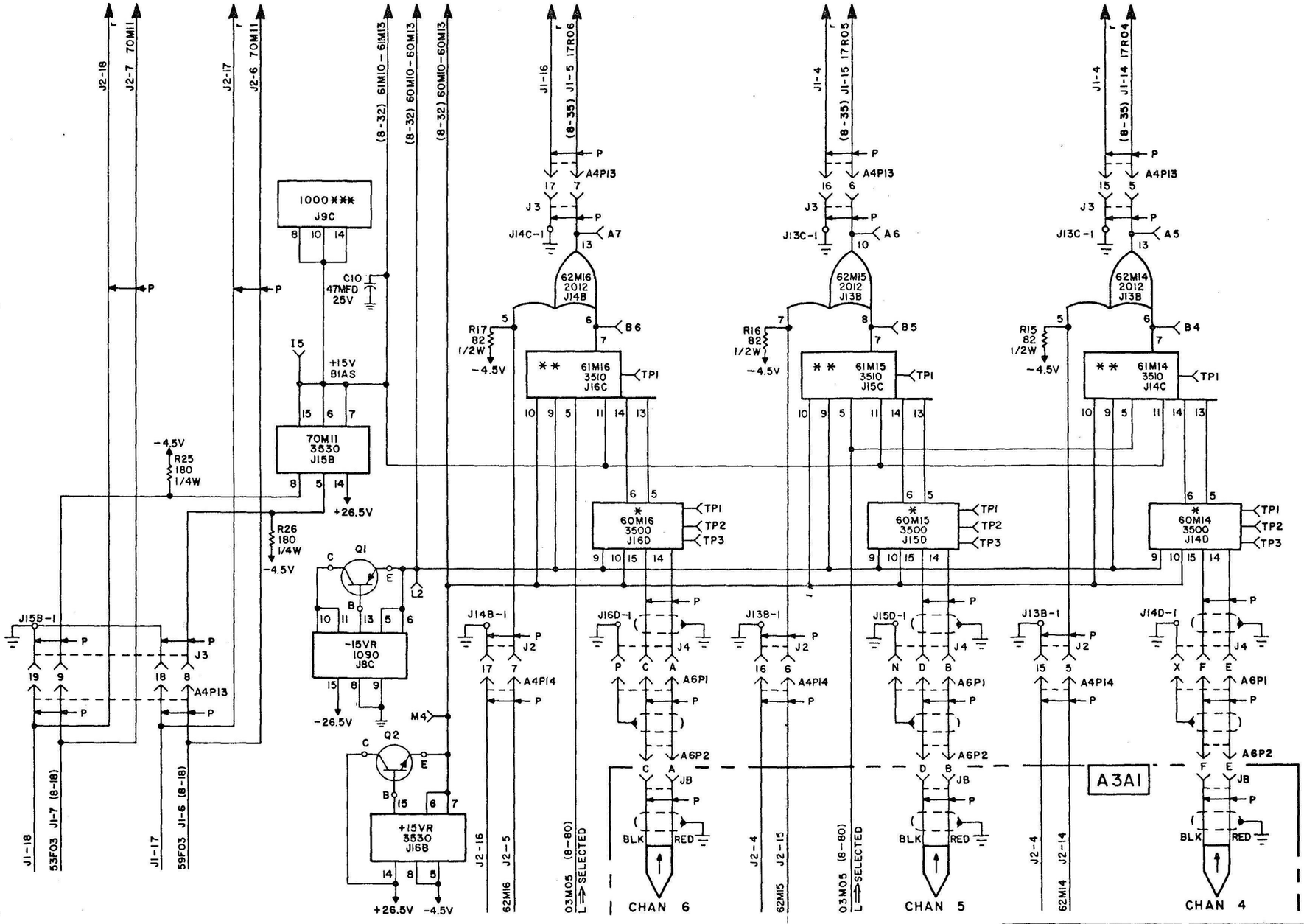

A3A3

NOTES:

1. JACK J2 IS CONNECTED BY JUMPER CABLE TO JACK J1 OF AN ADJACENT TAPE HANDLER. (REFER TO INTERCONNECTION DIAGRAM FIGURE 2-9)
2. JACK J1 IS CONNECTED BY JUMPER CABLE TO J2 OF AN ADJACENT TAPE HANDLER OR TO J11 OR J12 OF MAGNETIC TAPE CONTROL. (REFER TO INTERCONNECTION DIAGRAM FIGURE 2-9).
3. * READ AMPLIFIER MODULE.

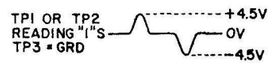

4. ** READ DETECTOR MODULE.

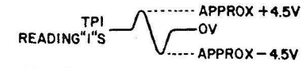

5. *** CAPACITOR ASSEMBLY MODULE.

FIGURE 8-33

QTY REQD	FIND	REF DES	CODE IDENT	DWG SIZE	PART OR IDENTIFYING NO.	NOMENCLATURE OR DESCRIPTION

LIST OF MATERIAL

IDENT NO. 7030241-00

THIS DOCUMENT CONTAINS CONFIDENTIAL INFORMATION OF THE UNIVAC DIVISION OF SPERRY RAND CORPORATION AND IS FURNISHED PURSUANT TO THE FOLLOWING INSTRUMENT.

ON THE UNDERSTANDING THAT THIS DOCUMENT AND THE INFORMATION THEREON MAY NOT BE DEALT WITH IN ANY MANNER EXCEPT FOR THE PURPOSES OF THAT INSTRUMENT OR AS OTHERWISE PERMITTED IN WRITING BY THE UNIVAC DIVISION OF SPERRY RAND CORPORATION.

UNLESS OTHERWISE SPECIFIED
DIMENSION IN INCHES. TOLERANCE ON
2 PLACE DECIMALS ±
3 PLACE DECIMALS ±
ANGLES ±
HOLE DIAMETER TOLERANCE
0 THRU .250 +.003 −.002
.251 THRU .500 +.005 −.003
.501 & LARGER +.010 −.005
THREADS EXT CL 2A, INT CL 2B
MATERIAL
FINISH
NEXT ASSY | EQUIPMENT
APPLICATION
COMMODITY CODE

LAYOUT		DATE
DRAFTSMAN	J. R. CURTIS	4-2065
CHECKER	B. POPOV	
ENGINEER	R.D.MCCUMBER	10-28-65
APPROVAL		

CLASS A

UNIVAC
DIVISION OF SPERRY RAND CORPORATION

TITLE
FUNCTIONAL SCHEMATIC, 1541 READ AMPLIFIERS AND DETECTORS, BITS 4-6

CODE IDENT NO.	SIZE	DWG NO.
90536	D	7030241

SCALE — LIGHT — SHEET 1 OF 1

REVISIONS						
SYM	ZONE	EIR	DESCRIPTION	C+A	DATE	APPROVED

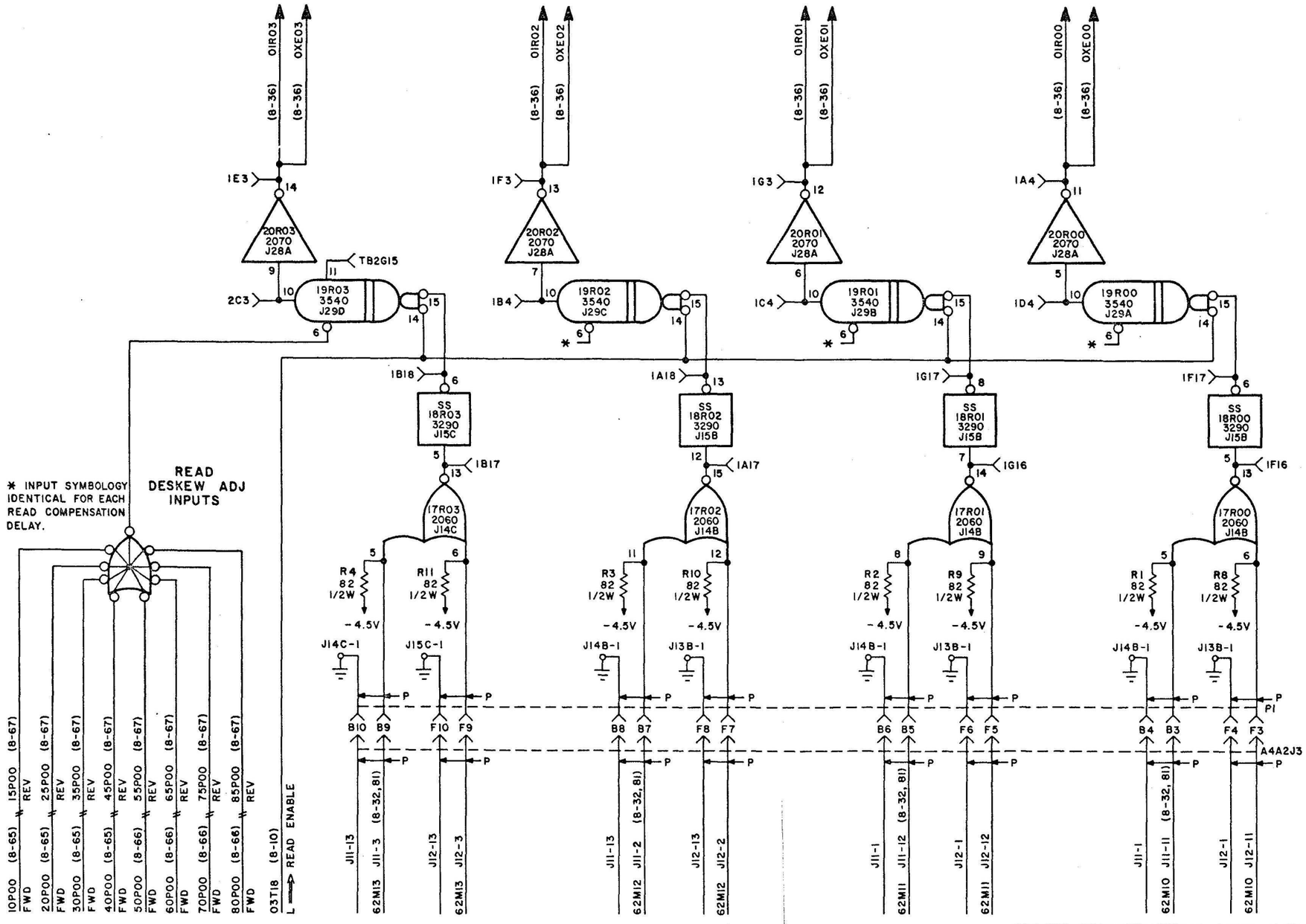

A13A2

NOTE:
1. INPUTS TO JACK J12 ARE (VIA JUMPER CABLE) FROM JACK J1 OF TAPE HANDLER CABINET POSITIONED TO THE RIGHT OF MAGNETIC TAPE CONTROL (REFER TO INTERCONNECTION DIAGRAM FIGURE 2-9).
2. INPUTS TO JACK J11 ARE (VIA JUMPER CABLE) FROM JACK J1 OF TAPE HANDLER CABINET SECTION TO THE LEFT OF MAGNETIC TAPE CONTROL (REFER TO INTERCONNECTION DIAGRAM FIGURE 2-9).

FIGURE 8-34

QTY REQD	FIND	REF DES	CODE IDENT	DWG SIZE	PART OR IDENTIFYING NO.	NOMENCLATURE OR DESCRIPTION

LIST OF MATERIAL

IDENT NO. 7030244-00

THIS DOCUMENT CONTAINS CONFIDENTIAL INFORMATION OF THE UNIVAC DIVISION OF SPERRY RAND CORPORATION AND IS FURNISHED PURSUANT TO THE FOLLOWING INSTRUMENT

ON THE UNDERSTANDING THAT THIS DOCUMENT AND THE INFORMATION THEREON, WILL NOT BE DEALT WITH IN ANY MANNER EXCEPT FOR THE PURPOSE OF THAT INSTRUMENT OR AS OTHERWISE PERMITTED IN WRITING BY THE UNIVAC DIVISION OF SPERRY RAND CORPORATION

UNLESS OTHERWISE SPECIFIED
DIMENSION IN INCHES. TOLERANCE ON
2 PLACE DECIMALS ± | 3 PLACE DECIMALS ± | ANGLES ±
HOLE DIAMETER TOLERANCE
0 THRU 230 +.003 −.002 | 231 THRU 500 +.005 −.003 | 501 & LARGER +.010 −.005
THREADS: EXT CL 2A, INT CL 2B
MATERIAL
FINISH
NEXT ASSY | EQUIPMENT
APPLICATION
COMMODITY CODE

LAYOUT		DATE
DRAFTSMAN	J R CURTIS	4-23-65
CHECKER	B. POPOV	10-28-65
ENGINEER	R.D. MCCUMBER	10-28-65
APPROVAL		10-28-65

CLASS A

UNIVAC
DIVISION OF SPERRY RAND CORPORATION

TITLE
FUNCTIONAL SCHEMATIC, READ COMPENSATION DELAYS, BITS 00-03

CODE IDENT NO.	SIZE	DWG NO.
90536	D	7030244

SCALE | WEIGHT | SHEET 1 OF 1

REVISIONS						
SYM	ZONE	EIR	DESCRIPTION	CHK	DATE	APPROVED
A		77682	SEE EIR			

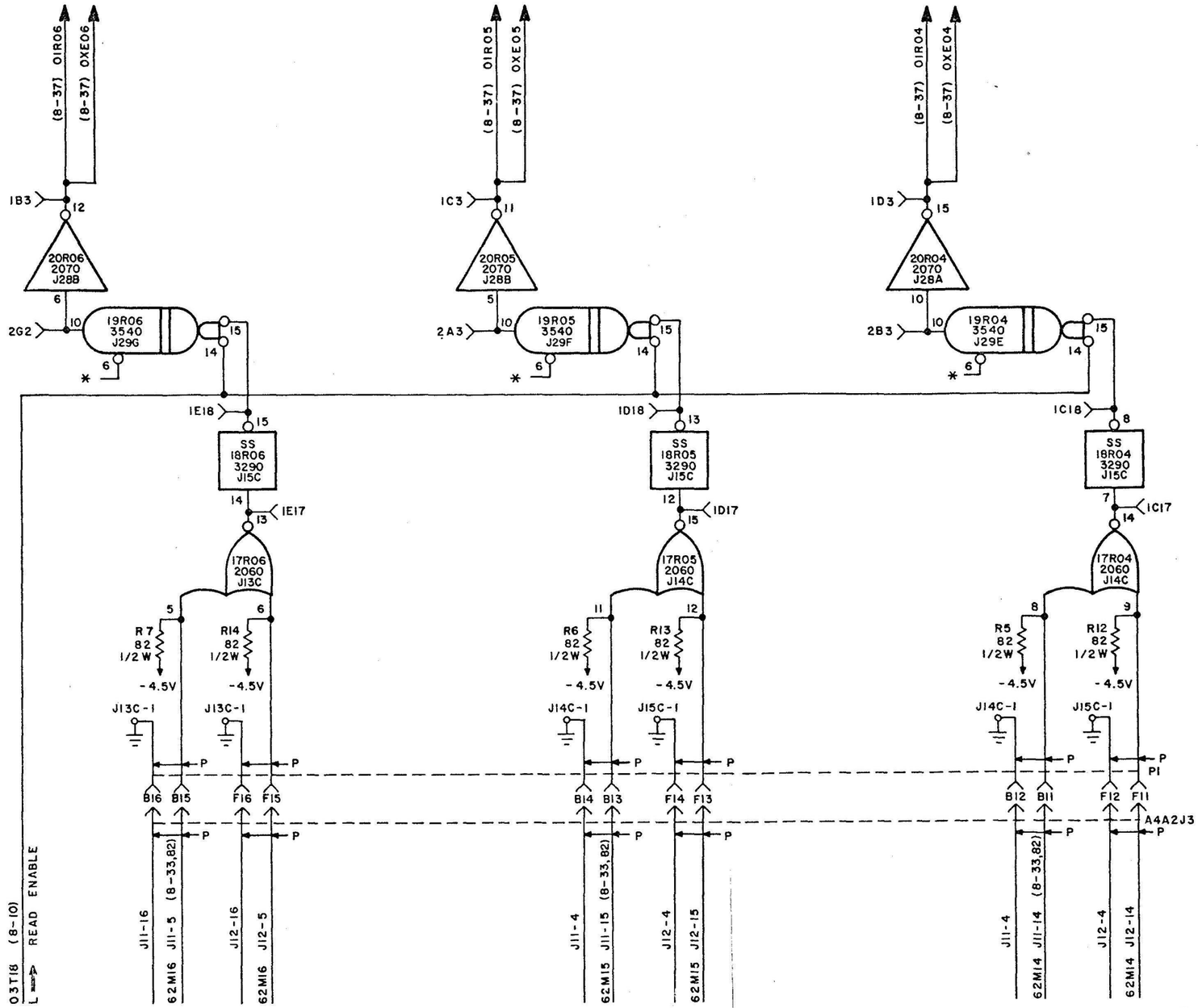

NOTE:

1. INPUTS TO JACK J12 ARE (VIA JUMPER CABLE) FROM JACK J1 OF TAPE HANDLER CABINET POSITIONED TO THE RIGHT OF MAGNETIC TAPE CONTROL (REFER TO INTERCONNECTION DIAGRAM FIGURE 2-9).
2. INPUTS TO JACK J11 ARE (VIA JUMPER CABLE) FROM JACK J1 OF TAPE HANDLER CABINET SECTION TO THE LEFT OF MAGNETIC TAPE CONTROL (REFER TO INTERCONNECTION DIAGRAM FIGURE 2-9).
3. * - FOR INPUT SYMBOLOGY SEE FIGURE 8-34.

A13A2

FIGURE 8-35

QTY REQD	FIND	REF DES	CODE IDENT	DWG SIZE	PART OR IDENTIFYING NO.	NOMENCLATURE OR DESCRIPTION

LIST OF MATERIAL

IDENT NO. 7030245-00

THIS DOCUMENT CONTAINS CONFIDENTIAL INFORMATION OF THE UNIVAC DIVISION OF SPERRY RAND CORPORATION AND IS FURNISHED PURSUANT TO THE FOLLOWING INSTRUMENT:

ON THE UNDERSTANDING THAT THIS DOCUMENT AND THE INFORMATION THEREON MAY NOT BE DEALT WITH, IN ANY MANNER EXCEPT FOR THE PURPOSES OF THAT INSTRUMENT OR AS OTHERWISE PERMITTED IN WRITING BY THE UNIVAC DIVISION OF SPERRY RAND CORPORATION

UNLESS OTHERWISE SPECIFIED
DIMENSION IN INCHES. TOLERANCE ON 2 PLACE DECIMALS ± ; 3 PLACE DECIMALS ± ; ANGLES ±
HOLE DIAMETER TOLERANCE: 0 THRU .250 +.003 −.002; .251 THRU .500 +.005 −.003; .501 & LARGER +.010 −.005
THREADS: EXT CL 2A, INT CL 2B
MATERIAL
FINISH
NEXT ASSY | EQUIPMENT
APPLICATION
COMMODITY CODE

		DATE
LAYOUT		
DRAFTSMAN	J R CURTIS	5-7-65
CHECKER	B. POPOV	10/28/65
ENGINEER	R.D. MCCUMBER	10-28-65
APPROVAL		10-28-65

CLASS A

UNIVAC
DIVISION OF SPERRY RAND CORPORATION

TITLE
FUNCTIONAL SCHEMATIC, READ COMPENSATION DELAYS, BITS 04-06

CODE IDENT NO.	SIZE	DWG NO.
90536	D	7030245

SCALE | WEIGHT | SHEET 1 OF 1

REVISIONS						
SYM	ZONE	EIR	DESCRIPTION	CHK	DATE	APPROVED
A		69714	SEE EIR		4-1-66	A.W.B.

A13A2

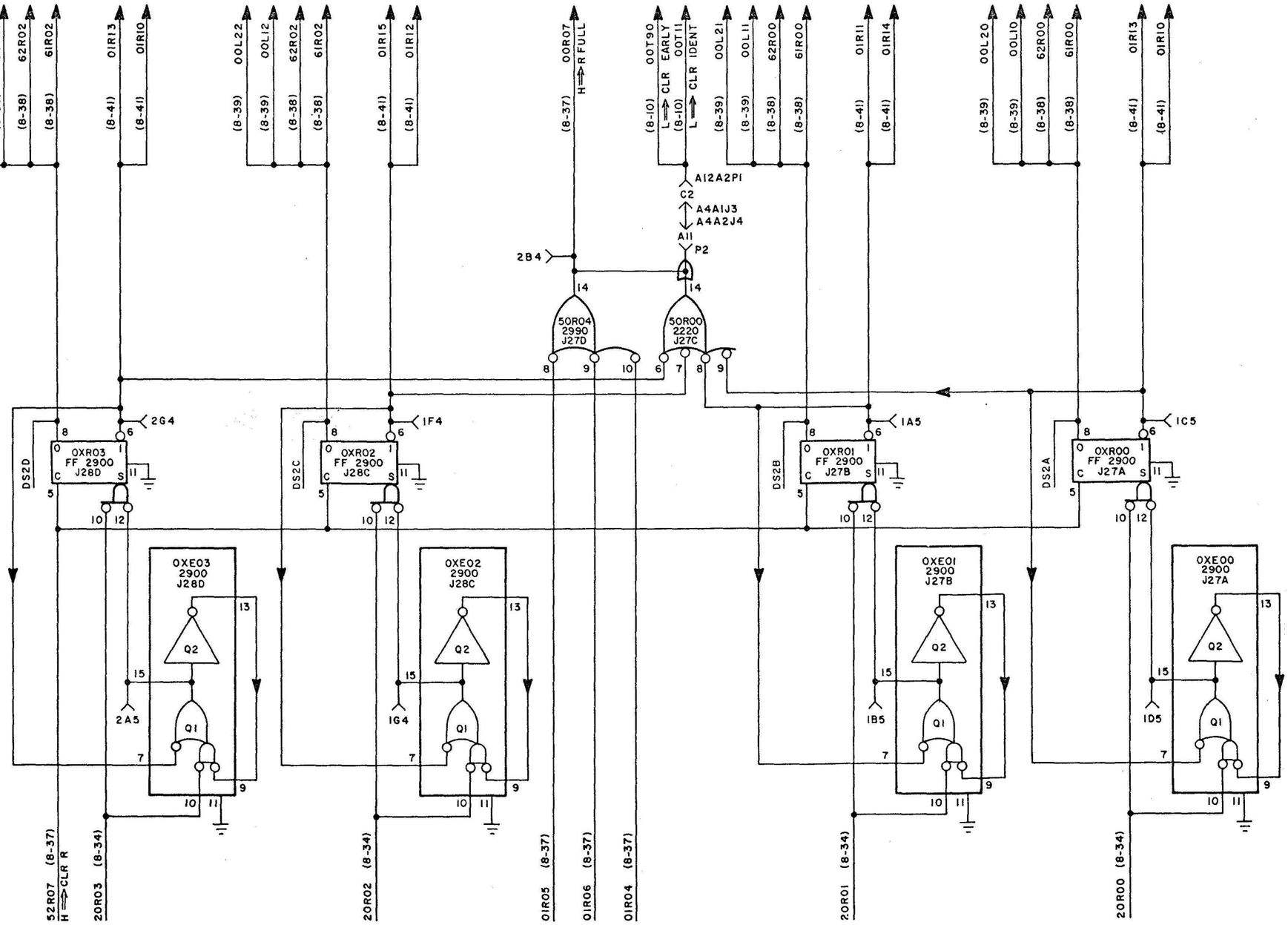

FIGURE 8-36

QTY REQD	FIND	REF DES	CODE IDENT	DWG SIZE	PART OR IDENTIFYING NO	NOMENCLATURE OR DESCRIPTION

LIST OF MATERIAL

IDENT NO. 7030229-00

UNLESS OTHERWISE SPECIFIED DIMENSION IN INCHES TOLERANCE ON 2 PLACE DECIMALS ± 3 PLACE DECIMALS ± ANGLES ±

HOLE DIAMETER TOLERANCE: 3 THRU 250 ± .003; 251 THRU 500 ± .005; 501 & LARGER ± .010; .002 .003 .005

THREADS FIT CLASS INT CL 2B

MATERIAL

FINISH

NEXT ASSY | EQUIPMENT

APPLICATION

		DATE
LAYOUT		
DRAFTSMAN	J R CURTIS	4-6-65
CHECKER	B. POPOV	10/28/65
ENGINEER	R.D. MCCUMBER	10-28-65
APPROVAL		10-28-65

CLASS A

UNIVAC
DIVISION OF SPERRY RAND CORPORATION

TITLE
FUNCTIONAL SCHEMATIC, READ REGISTER, BITS 00-03

CODE IDENT NO.	SIZE	DWG NO.
90536	D	7030229

SCALE | WEIGHT | SHEET 1 OF 1

REVISIONS						
SYM	ZONE	EIR	DESCRIPTION	CHK	DATE	APPROVED

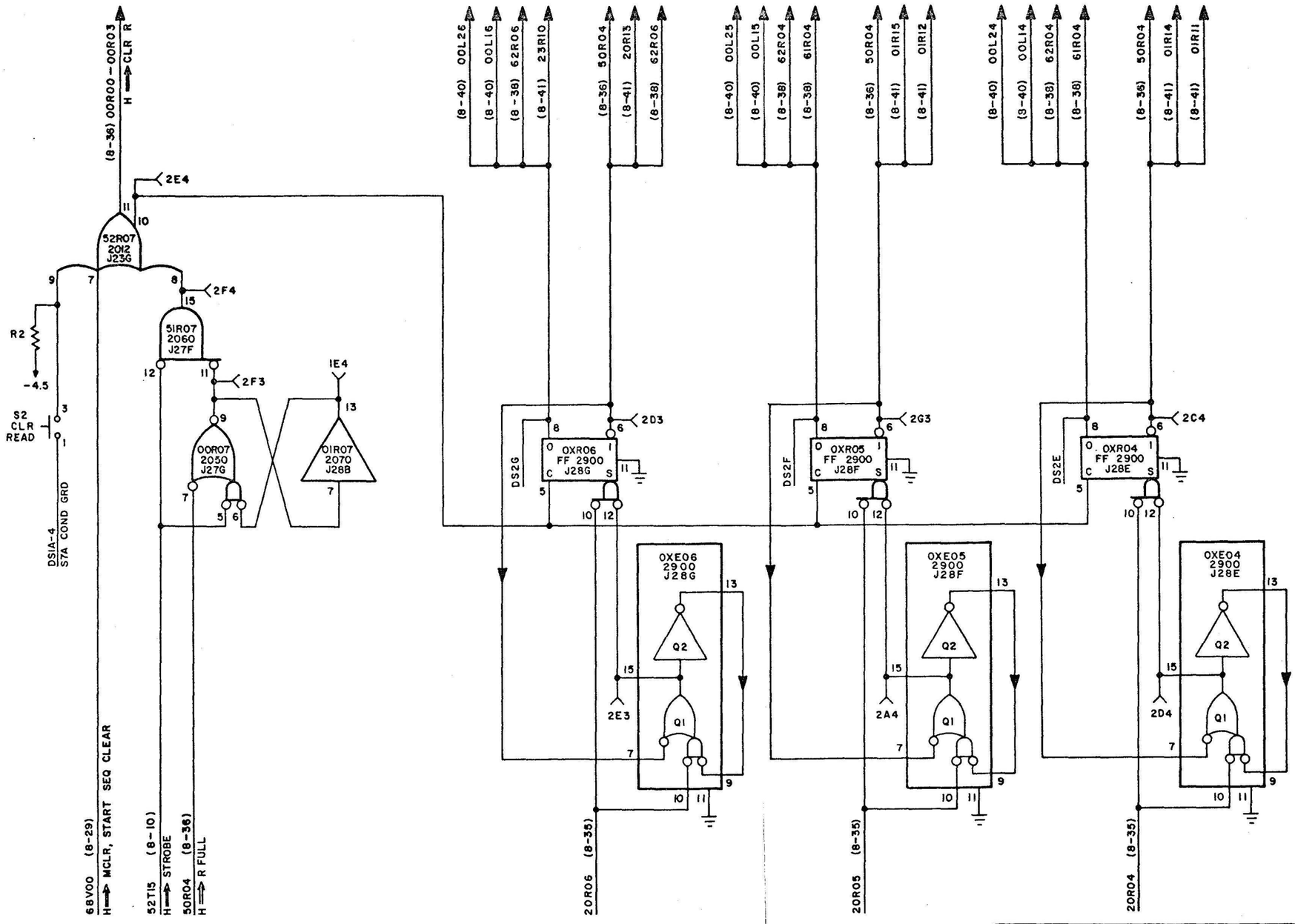

A13A2

FIGURE 8-37

QTY REQD	FIND	REF DES	CODE IDENT	DWG SIZE	PART OR IDENTIFYING NO.	NOMENCLATURE OR DESCRIPTION

LIST OF MATERIAL

IDENT NO. 7030230-00

THIS DOCUMENT CONTAINS CONFIDENTIAL INFORMATION OF THE UNIVAC DIVISION OF SPERRY RAND CORPORATION AND IS FURNISHED PURSUANT TO THE FOLLOWING INSTRUMENT.

ON THE UNDERSTANDING THAT THIS DOCUMENT AND THE INFORMATION THEREON MAY NOT BE DEALT WITH IN ANY MANNER EXCEPT FOR THE PURPOSES OF THAT INSTRUMENT OR AS OTHERWISE PERMITTED IN WRITING BY THE UNIVAC DIVISION OF SPERRY RAND CORPORATION.

UNLESS OTHERWISE SPECIFIED
DIMENSION IN INCHES. TOLERANCE ON 2 PLACE DECIMALS ±, 3 PLACE DECIMALS ±, ANGLES ±
HOLE DIAMETER TOLERANCE: 0 THRU 250 +.003 −.002; 251 THRU 500 +.005 −.003; 501 & LARGER +.010 −.005
THREADS: EXT CL 2A, INT CL 2B
MATERIAL
FINISH
NEXT ASSY | EQUIPMENT
APPLICATION
COMMODITY CODE

LAYOUT		DATE
DRAFTSMAN	J R CURTIS	4-7-65
CHECKER	B. POPOV	10/27/65
ENGINEER	R.D. MCCUMBER	10-28-65
APPROVAL		10-29-65

CLASS A

UNIVAC
DIVISION OF SPERRY RAND CORPORATION

TITLE
FUNCTIONAL SCHEMATIC, READ REGISTER, BITS 04-06

CODE IDENT NO.	SIZE	DWG NO.
90536	D	7030230

SCALE | WEIGHT | SHEET 1 OF 1

REVISIONS					
SYM	ZONE	EIR	DESCRIPTION	CHK	DATE	APPROVED
A		69714	SEE EIR			A.W.B.

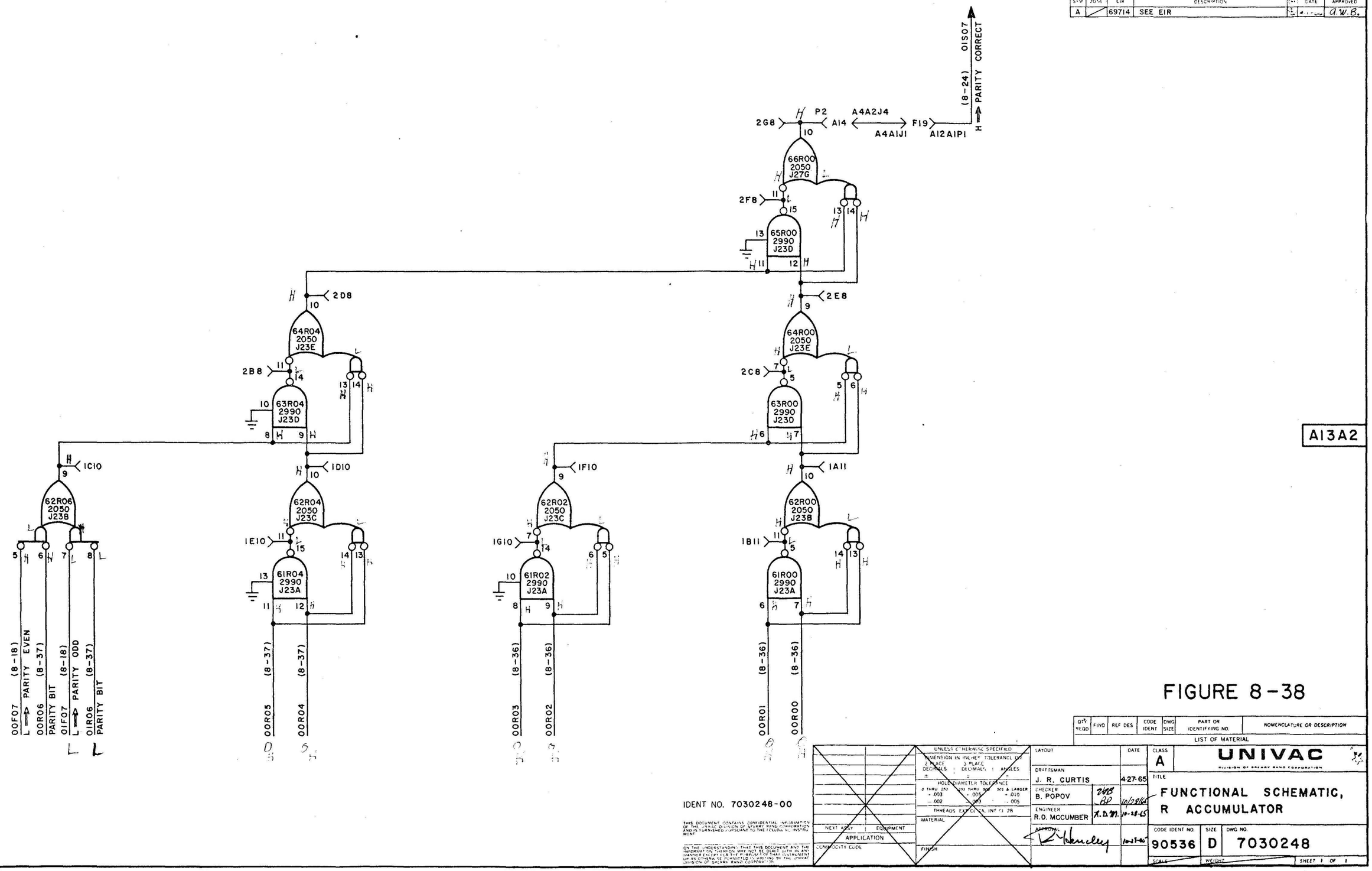

A13A2

FIGURE 8-38

QTY REQD	FIND	REF DES	CODE IDENT	DWG SIZE	PART OR IDENTIFYING NO.	NOMENCLATURE OR DESCRIPTION

LIST OF MATERIAL

IDENT NO. 7030248-00

THIS DOCUMENT CONTAINS CONFIDENTIAL INFORMATION OF THE UNIVAC DIVISION OF SPERRY RAND CORPORATION AND IS FURNISHED PURSUANT TO THE FOLLOWING AGREEMENT

ON THE UNDERSTANDING THAT THIS DOCUMENT AND THE INFORMATION THEREON MAY NOT BE DEALT WITH IN ANY MANNER EXCEPT FOR THE PURPOSE FOR THAT INSTRUMENT OR AS OTHERWISE PERMITTED BY WRITING BY THE UNIVAC DIVISION OF SPERRY RAND CORPORATION

UNLESS OTHERWISE SPECIFIED
DIMENSION IN INCHES TOLERANCE ON
2 PLACE DECIMALS ± | 3 PLACE DECIMALS ± | ANGLES ±
HOLE DIAMETER TOLERANCE
0 THRU .252 +.003 −.002 | .253 THRU .500 +.005 −.003 | .501 & LARGER +.010 −.005
THREADS EXTERNAL INT CL 2B
MATERIAL
NEXT ASSY | EQUIPMENT
APPLICATION
COMMODITY CODE
FINISH

		DATE
LAYOUT		
DRAFTSMAN	J. R. CURTIS	4-27-65
CHECKER	B. POPOV	10/29/65
ENGINEER	R.D. MCCUMBER	10-28-65
APPROVAL		10-29-65

CLASS A

UNIVAC
DIVISION OF SPERRY RAND CORPORATION

TITLE
FUNCTIONAL SCHEMATIC,
R ACCUMULATOR

CODE IDENT NO.	SIZE	DWG NO.
90536	D	7030248

SCALE | WEIGHT | SHEET 1 OF 1

REVISIONS						
SYM	ZONE	EIR	DESCRIPTION	CHK	DATE	APPROVED

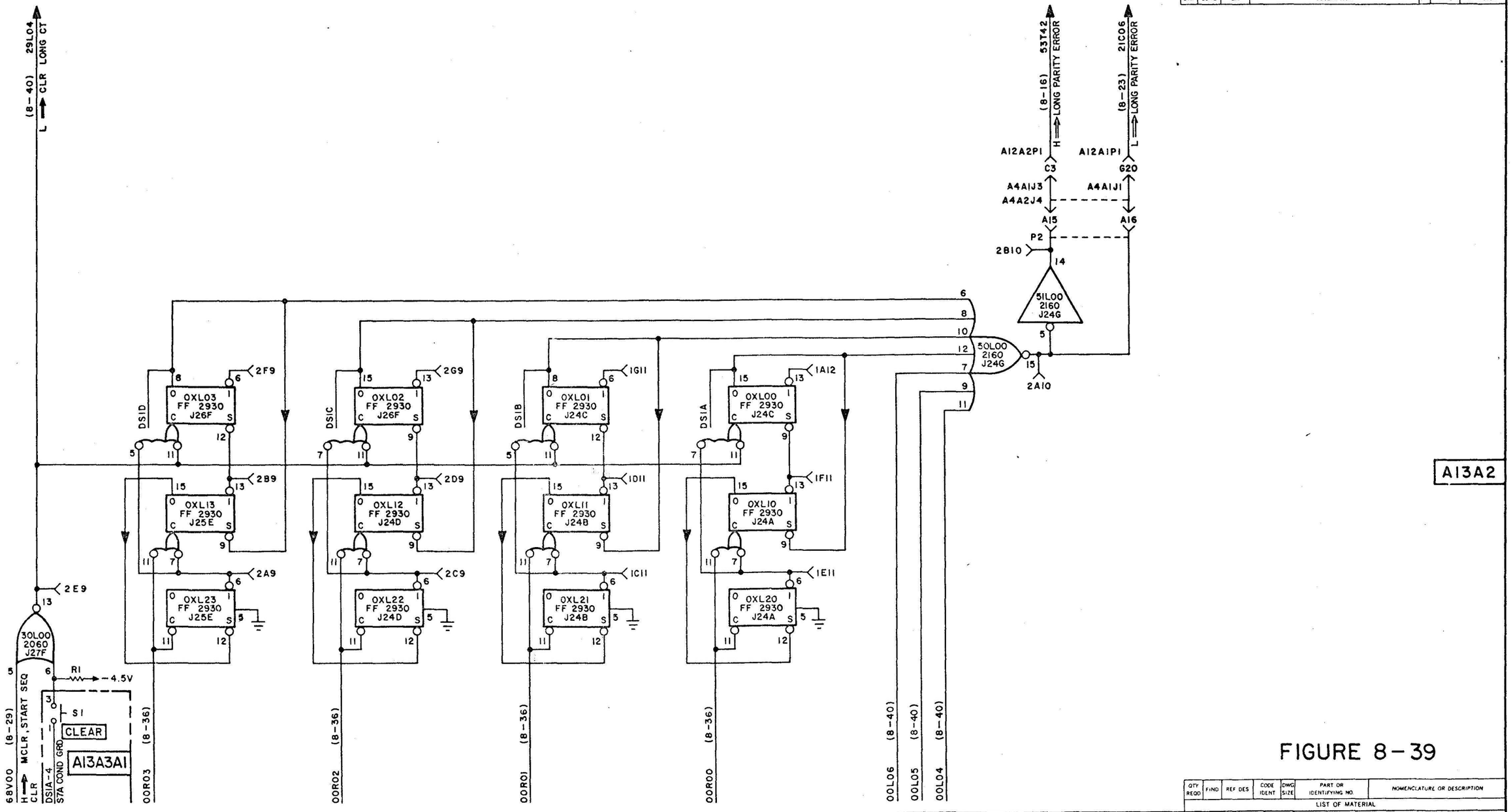

A13A2

FIGURE 8-39

QTY REQD	FIND	REF DES	CODE IDENT	DWG SIZE	PART OR IDENTIFYING NO.	NOMENCLATURE OR DESCRIPTION

LIST OF MATERIAL

IDENT NO. 7030246-00

THIS DOCUMENT CONTAINS CONFIDENTIAL INFORMATION OF THE UNIVAL DIVISION OF SPERRY RAND CORPORATION AND IS FURNISHED PURSUANT TO THE FOLLOWING AGREEMENT.

ON THE UNDERSTANDING THAT THIS DOCUMENT AND THE INFORMATION THEREON MAY NOT BE DUPLICATED IN ANY MANNER EXCEPT FOR THE PURPOSE FOR WHICH IT WAS SUPPLIED OR AS OTHERWISE PERMITTED IN WRITING BY THE UNIVAL DIVISION OF SPERRY RAND CORPORATION.

UNLESS OTHERWISE SPECIFIED
DIMENSION IN INCHES TOLERANCE ON
2 PLACE DECIMALS ± .03
3 PLACE DECIMALS ± .010
ANGLES ±
HOLE DIAMETER TOLERANCE
0 THRU 250 +.003 -.002
251 THRU 500 +.005 -.003
501 & LARGER +.010 -.005
THREADS EXT CL 2A, INT CL 2B
MATERIAL
FINISH
NEXT ASSY | EQUIPMENT
APPLICATION
MFR'S CODE

LAYOUT		DATE
DRAFTSMAN	J R CURTIS	4-27-65
CHECKER	B. POPOV	11/18/65
ENGINEER	R.D. MCCUMBER	10-22-65
APPROVAL		10-28-65

CLASS A

UNIVAC
DIVISION OF SPERRY RAND CORPORATION

TITLE
FUNCTIONAL SCHEMATIC, LONGITUDINAL COUNT REGISTER, BITS 00-03

CODE IDENT NO.	SIZE	DWG NO.
90536	D	7030246

SCALE | WEIGHT | SHEET 1 OF 1

REVISIONS						
SYM	ZONE	EIR	DESCRIPTION	CAN	DATE	APPROVED

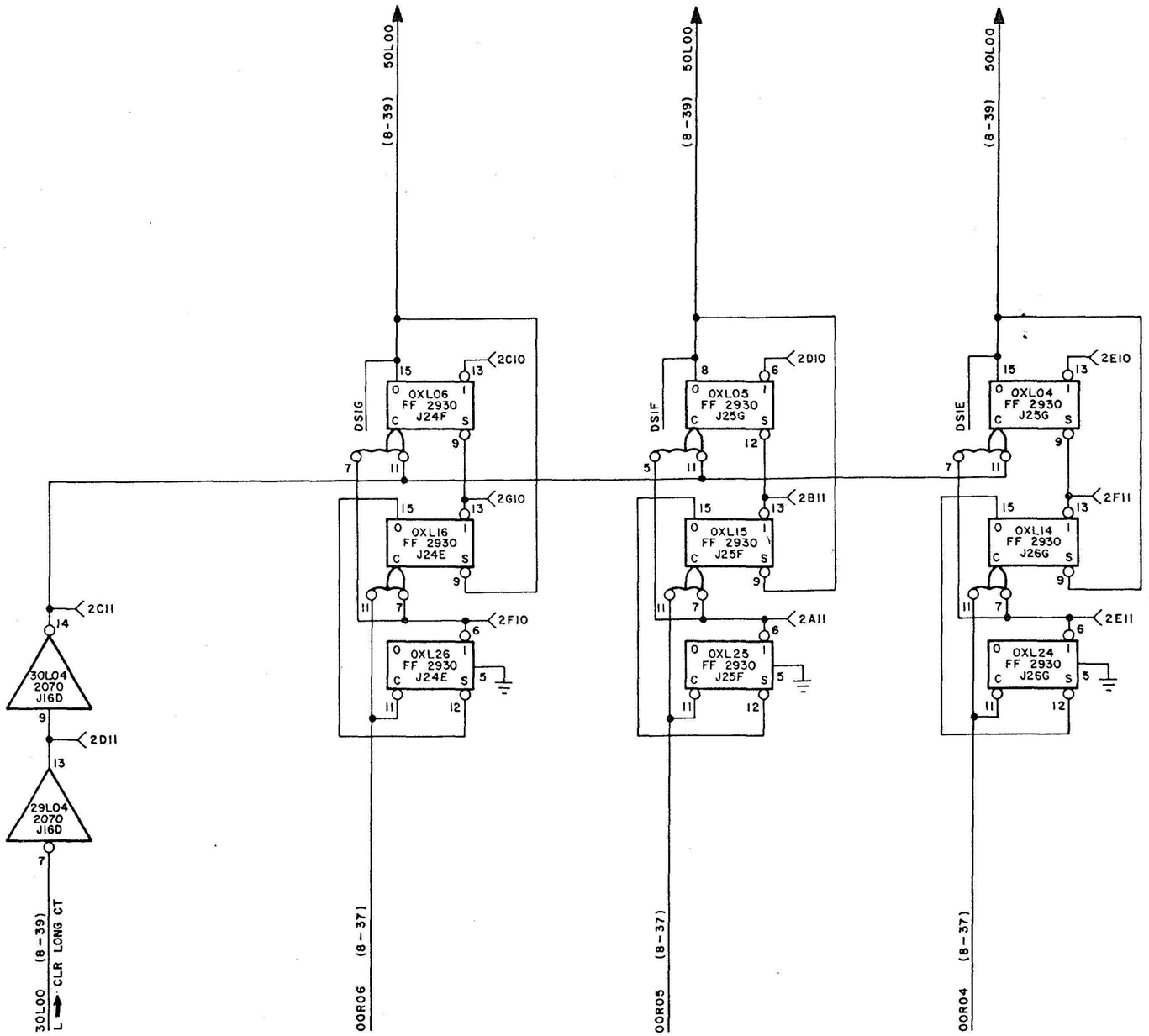

A13A2

FIGURE 8-40

QTY REQD	FIND	REF DES	CODE IDENT	DWG SIZE	PART OR IDENTIFYING NO.	NOMENCLATURE OR DESCRIPTION

LIST OF MATERIAL

IDENT NO. 7030247-00

THIS DOCUMENT CONTAINS CONFIDENTIAL INFORMATION OF THE UNIVAC DIVISION OF SPERRY RAND CORPORATION AND IS FURNISHED PURSUANT TO THE FOLLOWING INSTRUMENT:

ON THE UNDERSTANDING THAT THIS DOCUMENT AND THE INFORMATION THEREON MAY NOT BE DEALT WITH IN ANY MANNER EXCEPT FOR THE PURPOSES OF THAT INSTRUMENT OR AS OTHERWISE PERMITTED IN WRITING BY THE UNIVAC DIVISION OF SPERRY RAND CORPORATION.

UNLESS OTHERWISE SPECIFIED
DIMENSION IN INCHES. TOLERANCE ON 2 PLACE DECIMALS ±, 3 PLACE DECIMALS ±, ANGLES ±
HOLE DIAMETER TOLERANCE: 0 THRU .250 +.003 −.002; .251 THRU .500 +.005 −.003; .501 & LARGER +.010 −.005
THREADS EXT CL 2A, INT CL 2B
MATERIAL
FINISH
NEXT ASSY | EQUIPMENT
APPLICATION
COMMODITY CODE

		DATE
LAYOUT		
DRAFTSMAN	J R CURTIS	4-28-65
CHECKER	B. POPOV	4-28-65
ENGINEER	R.D. MCCUMBER	10-28-65
APPROVAL		10-28-65

CLASS A

UNIVAC
DIVISION OF SPERRY RAND CORPORATION

TITLE
FUNCTIONAL SCHEMATIC, LONGITUDINAL COUNT REGISTER, BITS 04-06

CODE IDENT NO.	SIZE	DWG NO.
90536	D	7030247

SCALE | WEIGHT | SHEET 1 OF 1

REVISIONS						
SYM	ZONE	EIR	DESCRIPTION	CHK	DATE	APPROVED

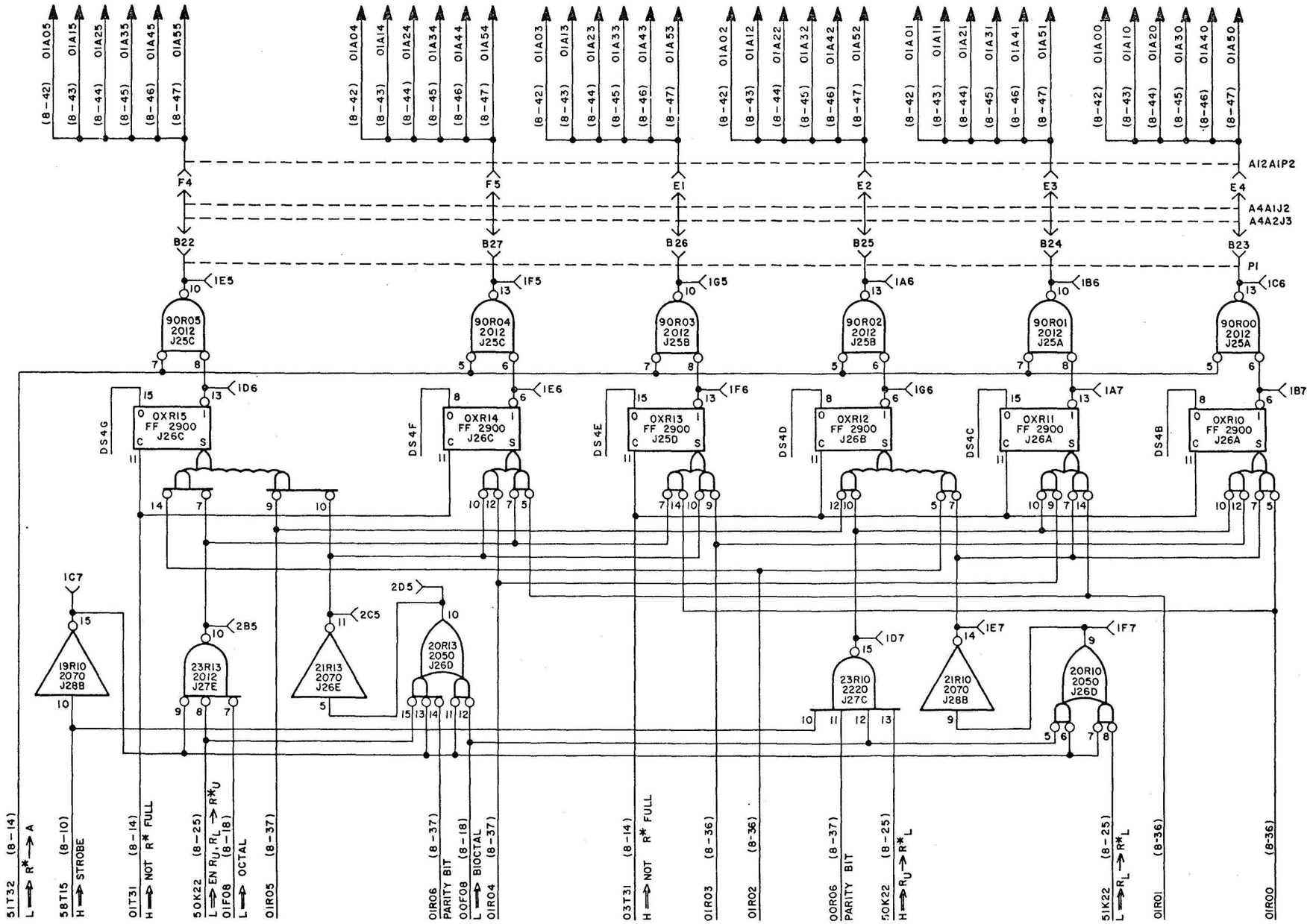

A13A2

FIGURE 8-41

QTY REQD	FIND	REF DES	CODE IDENT	DWG SIZE	PART OR IDENTIFYING NO.	NOMENCLATURE OR DESCRIPTION

LIST OF MATERIAL

IDENT NO. 7030239-00

THIS DOCUMENT CONTAINS CONFIDENTIAL INFORMATION OF THE UNIVAC DIVISION OF SPERRY RAND CORPORATION AND IS FURNISHED PURSUANT TO THE FOLLOWING INSTRUMENT.

ON THE UNDERSTANDING THAT THIS DOCUMENT AND THE INFORMATION THEREIN MAY NOT BE DEALT WITH IN ANY MANNER EXCEPT FOR THE PURPOSES OF THAT INSTRUMENT OR AS OTHERWISE PERMITTED IN WRITING BY THE UNIVAC DIVISION OF SPERRY RAND CORPORATION.

UNLESS OTHERWISE SPECIFIED
DIMENSION IN INCHES, TOLERANCE ON
2 PLACE DECIMALS ± | 3 PLACE DECIMALS ± | ANGLES ±
HOLE DIAMETER TOLERANCE
0 THRU .250 +.003 −.002 | .251 THRU .500 +.005 −.003 | .501 & LARGER +.010 −.005
THREADS EXT CL 2A, INT CL 2B
MATERIAL
NEXT ASSY | EQUIPMENT
APPLICATION
COMMODITY CODE
FINISH

		DATE
LAYOUT		
DRAFTSMAN	J R CURTIS	4-19-65
CHECKER	B. POPOV	10-28-65
ENGINEER	R.D. MCCUMBER	10-28-65
APPROVAL		10-28-65

CLASS A

UNIVAC
DIVISION OF SPERRY RAND CORPORATION

TITLE
FUNCTIONAL SCHEMATIC, R* REGISTER

CODE IDENT NO.	SIZE	DWG NO.
90536	D	7030239

SCALE | WEIGHT | SHEET 1 OF 1

REVISIONS					
SYM	ZONE	EIR	DESCRIPTION	DATE	APPROVED
A		79489	SEE EIR	9-15-64	ANP

A12A1

FIGURE 8-42

QTY REQD	FIND	REF DES	CODE IDENT	DWG SIZE	PART OR IDENTIFYING NO.	NOMENCLATURE OR DESCRIPTION

LIST OF MATERIAL

IDENT NO. 7030200-00

THIS DOCUMENT CONTAINS CONFIDENTIAL INFORMATION OF THE UNIVAC DIVISION OF SPERRY RAND CORPORATION AND IS FURNISHED PURSUANT TO THE FOLLOWING INSTRUMENT

ON THE UNDERSTANDING THAT THIS DOCUMENT AND THE INFORMATION IT CONTAINS SHALL BE DEALT WITH IN CONFIDENCE AND SHALL NOT BE REPRODUCED, COPIED, LENT OR DISCLOSED FOR EVALUATION PURPOSES OR FOR ANY OTHER PURPOSE TO ANYONE OUTSIDE THE UNIVAC DIVISION OF SPERRY RAND CORPORATION

UNLESS OTHERWISE SPECIFIED
DIMENSION IN INCHES, TOLERANCE ON 2 PLACE DECIMALS ±, 3 PLACE DECIMALS ±, ANGLES ±
HOLE DIAMETER TOLERANCE: 2 THRU 250 +.003 −.002; 251 THRU 500 +.005 −.003; 501 & LARGER +.010 −.005
THREADS EXT CL 2A, INT CL 2B
NEXT ASSY | EQUIPMENT
APPLICATION
COMMODITY CODE
MATERIAL
FINISH

LAYOUT		
DRAFTSMAN	F. MANNING	5-9-65
CHECKER	B. POPOV	5-11-65
ENGINEER	R.D. MCCUMBER	10-28-65
APPROVAL		

UNIVAC
DIVISION OF SPERRY RAND CORPORATION

TITLE: FUNCTIONAL SCHEMATIC, AO REGISTER

CLASS	CODE IDENT NO.	SIZE	DWG NO.
A	90536	D	7030200

SCALE | WEIGHT | SHEET 1 OF 1

REVISIONS						
SYM	ZONE	EIR	DESCRIPTION	CHK	DATE	APPROVED

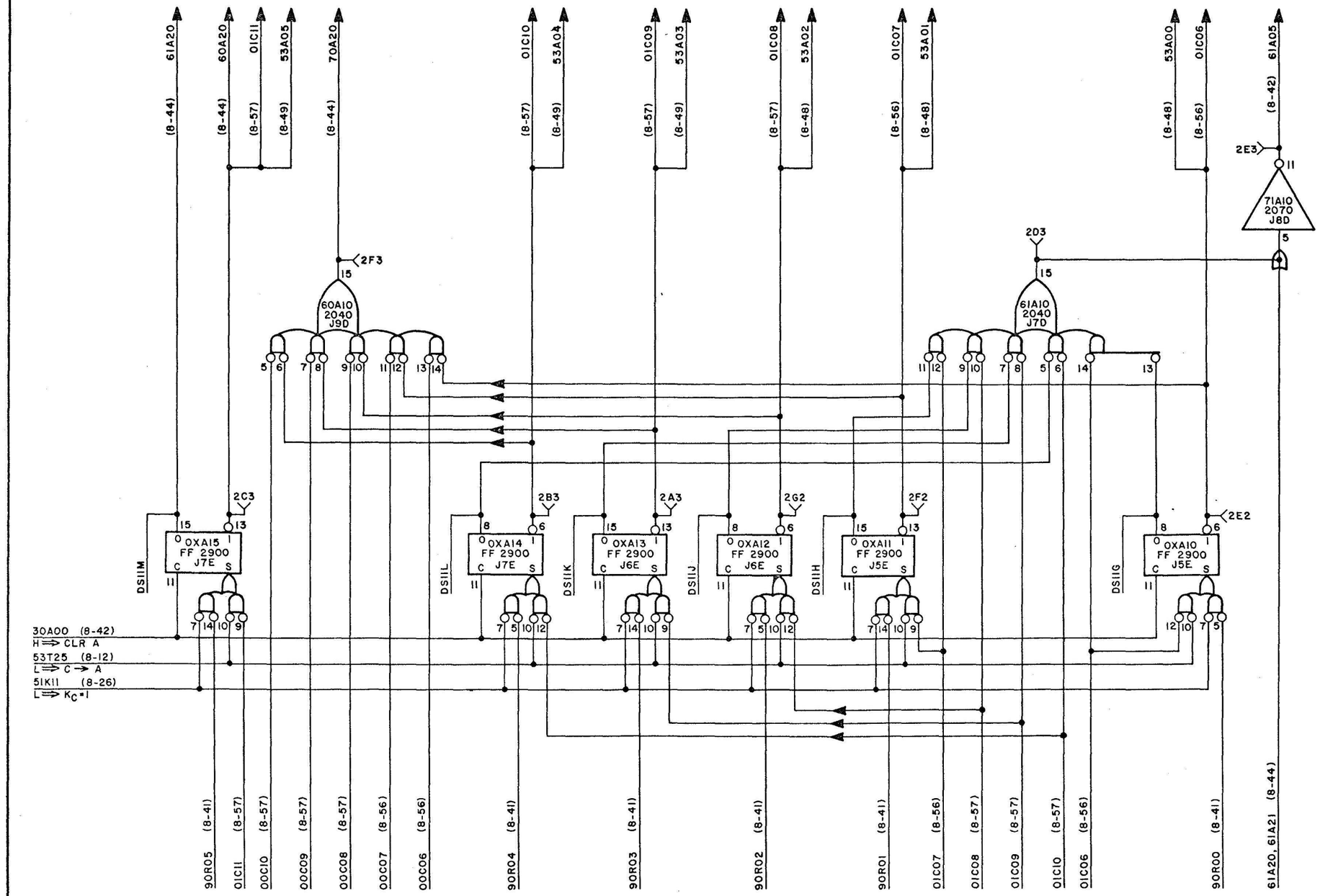

A12A1

FIGURE 8-43

QTY REQD	FIND	REF DES	CODE IDENT	DWG SIZE	PART OR IDENTIFYING NO.	NOMENCLATURE OR DESCRIPTION

LIST OF MATERIAL

IDENT NO. 7030201-00

THIS DOCUMENT CONTAINS CONFIDENTIAL INFORMATION OF THE UNIVAC DIVISION OF SPERRY RAND CORPORATION AND IS FURNISHED PURSUANT TO THE FOLLOWING AGREEMENT

ON THE UNDERSTANDING THAT THIS DOCUMENT AND THE INFORMATION THEREIN MAY NOT BE DISCLOSED OR MADE AVAILABLE EXCEPT FOR THE PURPOSE FOR WHICH IT IS FURNISHED OR AS OTHERWISE PERMITTED IN WRITING BY THE UNIVAC DIVISION OF SPERRY RAND CORPORATION

UNLESS OTHERWISE SPECIFIED
DIMENSION IN INCHES. TOLERANCE ON 2 PLACE DECIMALS ±, 3 PLACE DECIMALS ±, ANGLES ±
HOLE DIAMETER TOLERANCE: 0 THRU 250 +.003 −.002; 251 THRU 500 +.005 −.005; 501 & LARGER +.010 −.005
THREADS: EXT CL 2A, INT CL 2B
MATERIAL
FINISH
NEXT ASSY | EQUIPMENT
APPLICATION
COMMODITY CODE

		DATE
LAYOUT		
DRAFTSMAN	R. BRASKI	3-1-65
CHECKER	B. POPOV	10/26/65
ENGINEER	R.D. MCCUMBER	10-28-65
APPROVAL		10-28-65

CLASS A

UNIVAC
DIVISION OF SPERRY RAND CORPORATION

TITLE
FUNCTIONAL SCHEMATIC, AI REGISTER

CODE IDENT NO.	SIZE	DWG NO.
90536	D	7030201

SCALE | WEIGHT | SHEET 1 OF 1

REVISIONS						
SYM	ZONE	EIR	DESCRIPTION	CHK	DATE	APPROVED

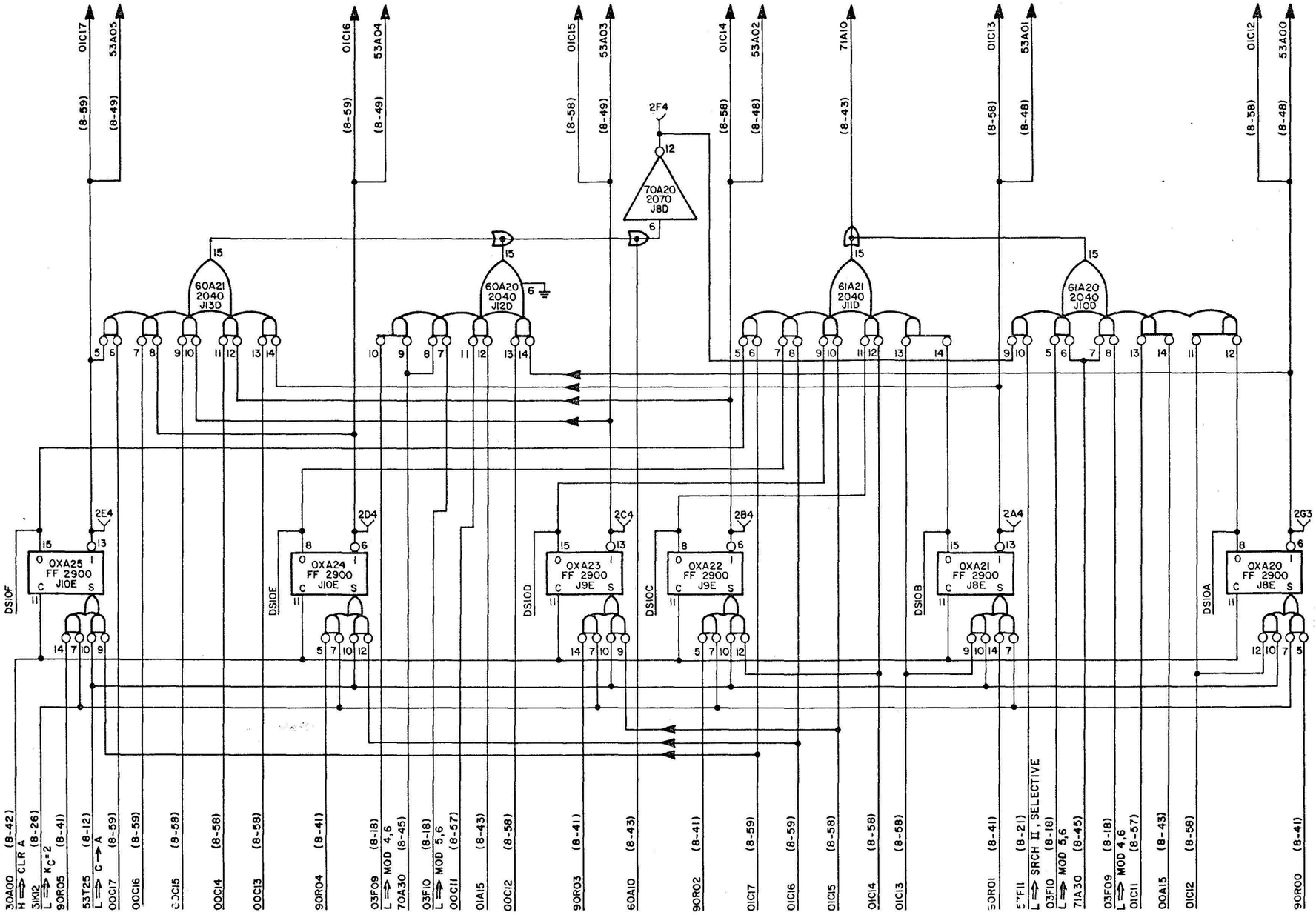

A12A1

FIGURE 8-44

QTY REQD	FIND	REF DES	CODE IDENT	DWG SIZE	PART OR IDENTIFYING NO.	NOMENCLATURE OR DESCRIPTION

LIST OF MATERIAL

IDENT NO. 7030202-00

THIS DOCUMENT CONTAINS CONFIDENTIAL INFORMATION OF THE UNIVAC DIVISION OF SPERRY RAND CORPORATION AND IS FURNISHED PURSUANT TO THE FOLLOWING INSTRUMENT

ON THE UNDERSTANDING THAT THIS DOCUMENT AND THE INFORMATION THEREON MAY NOT BE DEALT WITH IN ANY MANNER (EXCEPT FOR THE PURPOSES OF THAT INSTRUMENT) OR AS OTHERWISE PERMITTED IN WRITING BY THE UNIVAC DIVISION OF SPERRY RAND CORPORATION

UNLESS OTHERWISE SPECIFIED
DIMENSION IN INCHES, TOLERANCE ON
2 PLACE DECIMALS ±
3 PLACE DECIMALS ±
ANGLES ±
HOLE DIAMETER TOLERANCE
0 THRU .250 +.003 −.002
.251 THRU .500 +.005 −.003
.501 & LARGER +.010 −.005
THREADS EXT CL 2A, INT CL 2B
MATERIAL
FINISH
NEXT ASSY | EQUIPMENT
APPLICATION
COMMODITY CODE

		DATE
LAYOUT		
DRAFTSMAN	J R CURTIS	3-1-65
CHECKER	B. POPOV	3/25 BP 4/28/65
ENGINEER	R.D. MCCUMBER	22 4/30-65
APPROVAL	R D Hensley	4/28/65

CLASS A

UNIVAC
DIVISION OF SPERRY RAND CORPORATION

TITLE
FUNCTIONAL SCHEMATIC, A2 REGISTER

CODE IDENT NO.	SIZE	DWG NO.
90536	D	7030202

SCALE | WEIGHT | SHEET 1 OF 1

REVISIONS						
SYM	ZONE	EIR	DESCRIPTION	CHA	DATE	APPROVED

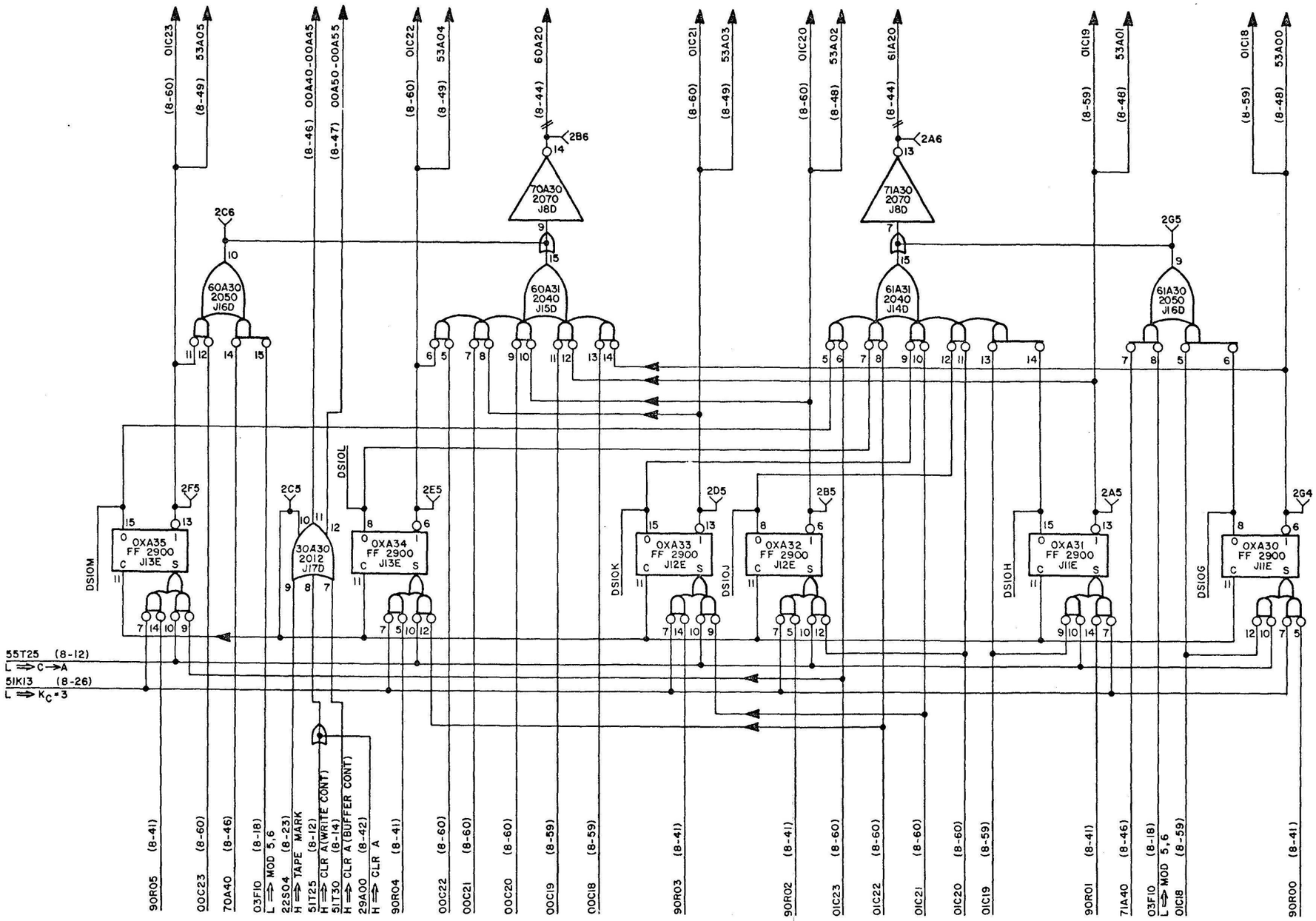

A12A1

FIGURE 8-45

QTY REQD	FIND	REF DES	CODE IDENT	DWG SIZE	PART OR IDENTIFYING NO.	NOMENCLATURE OR DESCRIPTION

LIST OF MATERIAL

IDENT NO. 7030203-00

THIS DOCUMENT CONTAINS CONFIDENTIAL INFORMATION OF THE UNIVAC DIVISION OF SPERRY RAND CORPORATION AND IS FURNISHED PURSUANT TO THE FOLLOWING INSTRUMENT:

ON THE UNDERSTANDING THAT THIS DOCUMENT AND THE INFORMATION CONTAINED THEREIN SHALL BE KEPT IN A MANNER EXCEPTING THE SAME FROM DISCLOSURE, AND THAT NEITHER IT NOR AS OTHERWISE PERMITTED IN WRITING BY THE UNIVAC DIVISION OF SPERRY RAND CORPORATION

UNLESS OTHERWISE SPECIFIED
DIMENSION IN INCHES. TOLERANCE ON
2 PLACE DECIMALS ±
3 PLACE DECIMALS ±
ANGLES ±
HOLE DIAMETER TOLERANCE
0 THRU .250 +.003 −.002
.251 THRU .500 +.005 −.003
.501 & LARGER +.010 −.005
THREADS EXT CL 2A, INT CL 2B
MATERIAL
NEXT ASSY | EQUIPMENT
APPLICATION
COMMODITY CODE
FINISH

LAYOUT		DATE
DRAFTSMAN	J R CURTIS	3-1-65
CHECKER	B. POPOV	10-28-65
ENGINEER	R.D. MCCUMBER	10-28-65
APPROVAL		10-28-65

CLASS A

UNIVAC
DIVISION OF SPERRY RAND CORPORATION

TITLE
FUNCTIONAL SCHEMATIC, A3 REGISTER

CODE IDENT NO.	SIZE	DWG NO.
90536	D	7030203

SCALE | WEIGHT | SHEET 1 OF 1

REVISIONS						
SYM	ZONE	EIR	DESCRIPTION	CHK	DATE	APPROVED

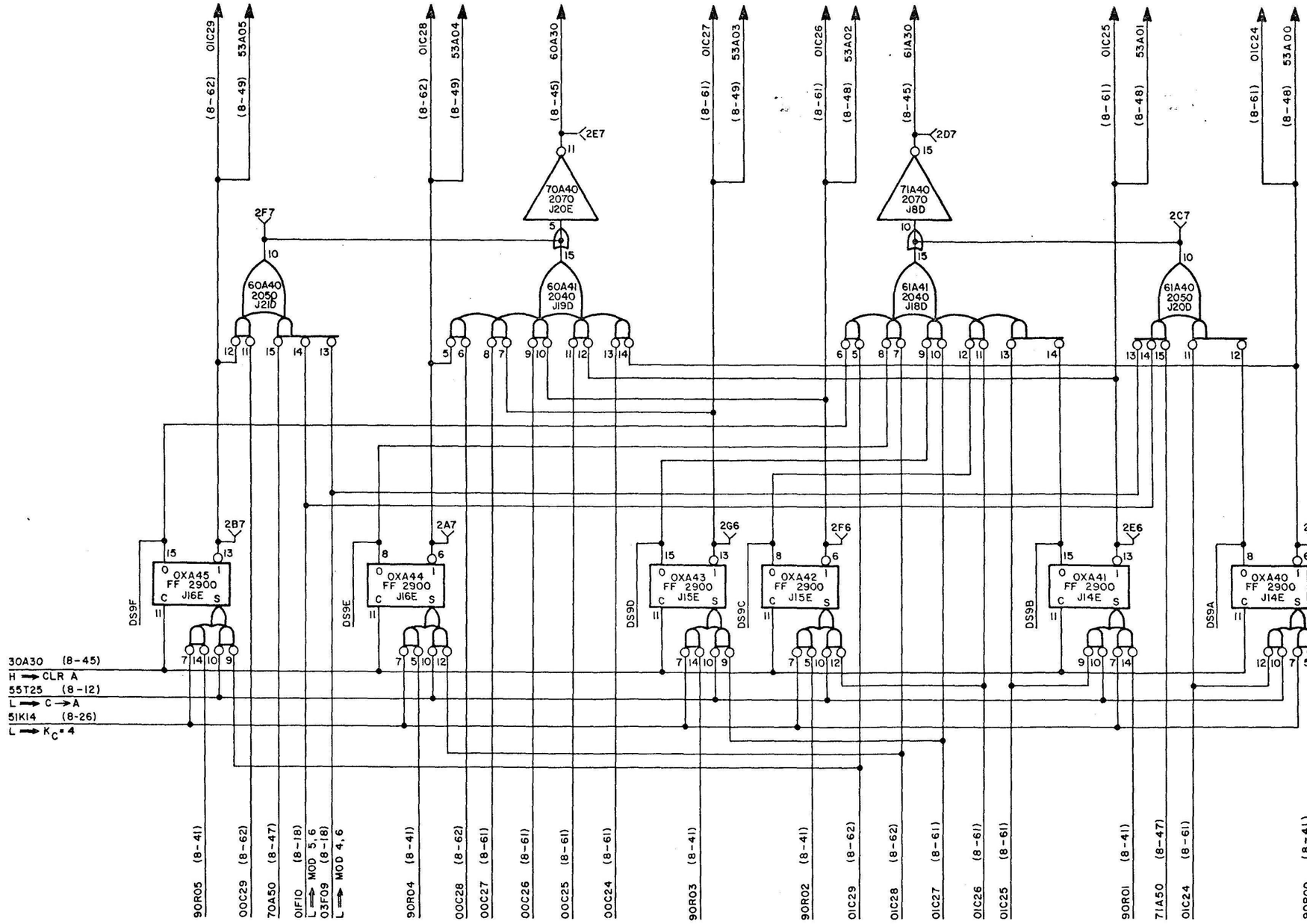

A12A1

FIGURE 8-46

QTY REQD	FIND	REF DES	CODE IDENT	DWG SIZE	PART OR IDENTIFYING NO.	NOMENCLATURE OR DESCRIPTION

LIST OF MATERIAL

IDENT NO. 7030204-00

THIS DOCUMENT CONTAINS CONFIDENTIAL INFORMATION OF THE UNIVAC DIVISION OF SPERRY RAND CORPORATION AND IS FURNISHED PURSUANT TO THE FOLLOWING AGREEMENT

ON THE UNDERSTANDING THAT THIS DOCUMENT AND THE INFORMATION THEREIN MAY NOT BE DEALT WITH IN ANY MANNER DETRIMENTAL TO THE INTERESTS OF THE UNIVAC DIVISION OF SPERRY RAND CORPORATION.

UNLESS OTHERWISE SPECIFIED
DIMENSION IN INCHES TOLERANCE ON
2 PLACE DECIMALS ± .01
3 PLACE DECIMALS ± .005
ANGLES ±
HOLE DIAMETER TOLERANCE
0 THRU .250 +.003 −.002
251 THRU .500 +.005 −.005
501 & LARGER +.010 −.005
THREADS EXTERNAL 2A INT CL 2B
MATERIAL
FINISH
NEXT ASSY
EQUIPMENT
APPLICATION
COMMODITY CODE

LAYOUT		DATE
DRAFTSMAN	J. R. CURTIS	3-2-65
CHECKER	B. POPOV	10/28/65
ENGINEER	R. D. MCCUMBER	10-28-65
APPROVAL		10-28-65

CLASS A

UNIVAC
DIVISION OF SPERRY RAND CORPORATION

TITLE
FUNCTIONAL SCHEMATIC,
A4 REGISTER

CODE IDENT NO.	SIZE	DWG NO.
90536	D	7030204

SCALE | WEIGHT | SHEET 1 OF 1

REVISIONS						
SYM	ZONE	EIR	DESCRIPTION	CHK	DATE	APPROVED

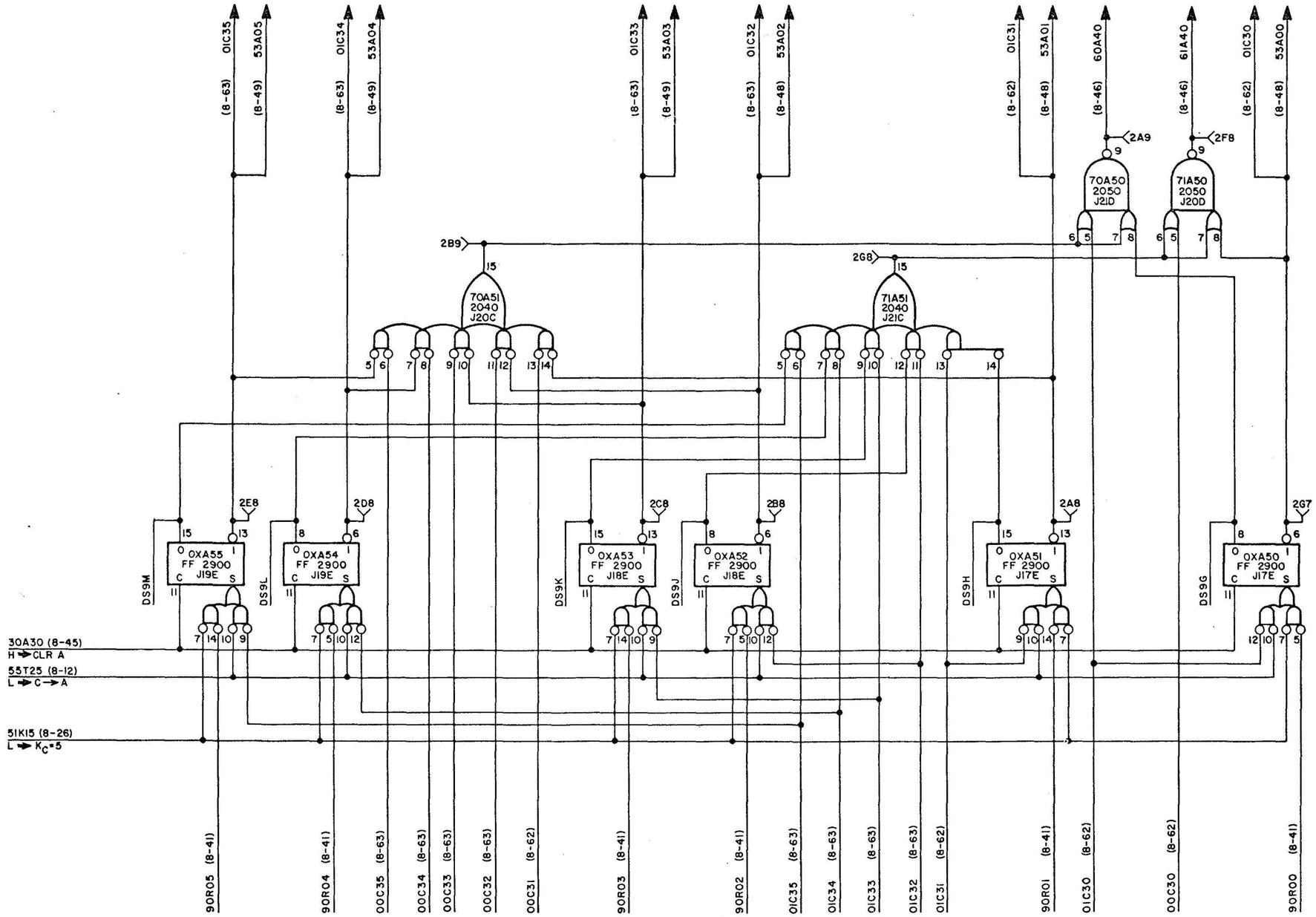

A12A1

FIGURE 8-47

QTY REQD	FIND	REF DES	CODE IDENT	DWG SIZE	PART OR IDENTIFYING NO.	NOMENCLATURE OR DESCRIPTION

LIST OF MATERIAL

IDENT NO. 7030205-00

THIS DOCUMENT CONTAINS CONFIDENTIAL INFORMATION OF THE UNIVAC DIVISION OF SPERRY RAND CORPORATION AND IS FURNISHED PURSUANT TO THE FOLLOWING INSTRUMENT

ON THE UNDERSTANDING THAT THIS DOCUMENT AND THE INFORMATION THEREON MAY NOT BE DEALT WITH IN ANY MANNER DETRIMENTAL TO THE INTERESTS OF THAT INSTRUMENT OR AS OTHERWISE PERMITTED IN WRITING BY THE UNIVAC DIVISION OF SPERRY RAND CORPORATION

UNLESS OTHERWISE SPECIFIED
DIMENSION IN INCHES TOLERANCE ON
2 PLACE DECIMALS ± | 3 PLACE DECIMALS ± | ANGLES ±
HOLE DIAMETER TOLERANCE
0 THRU .250 +.003 −.002 | .251 THRU .500 +.005 −.003 | .501 & LARGER +.010 −.005
THREADS EXT CL 2A, INT CL 2B
MATERIAL
FINISH
NEXT ASSY | EQUIPMENT
APPLICATION
COMMODITY CODE

		DATE
LAYOUT		
DRAFTSMAN	J R CURTIS	3-3-65
CHECKER	B.POPOV	3/8/65
ENGINEER	R.D.MCCUMBER	10-28-65
APPROVED		10-28-65

CLASS A

UNIVAC
DIVISION OF SPERRY RAND CORPORATION

TITLE
FUNCTIONAL SCHEMATIC,
A5 REGISTER

CODE IDENT NO.	SIZE	DWG NO.
90536	D	7030205

SCALE | WEIGHT | SHEET 1 OF 1

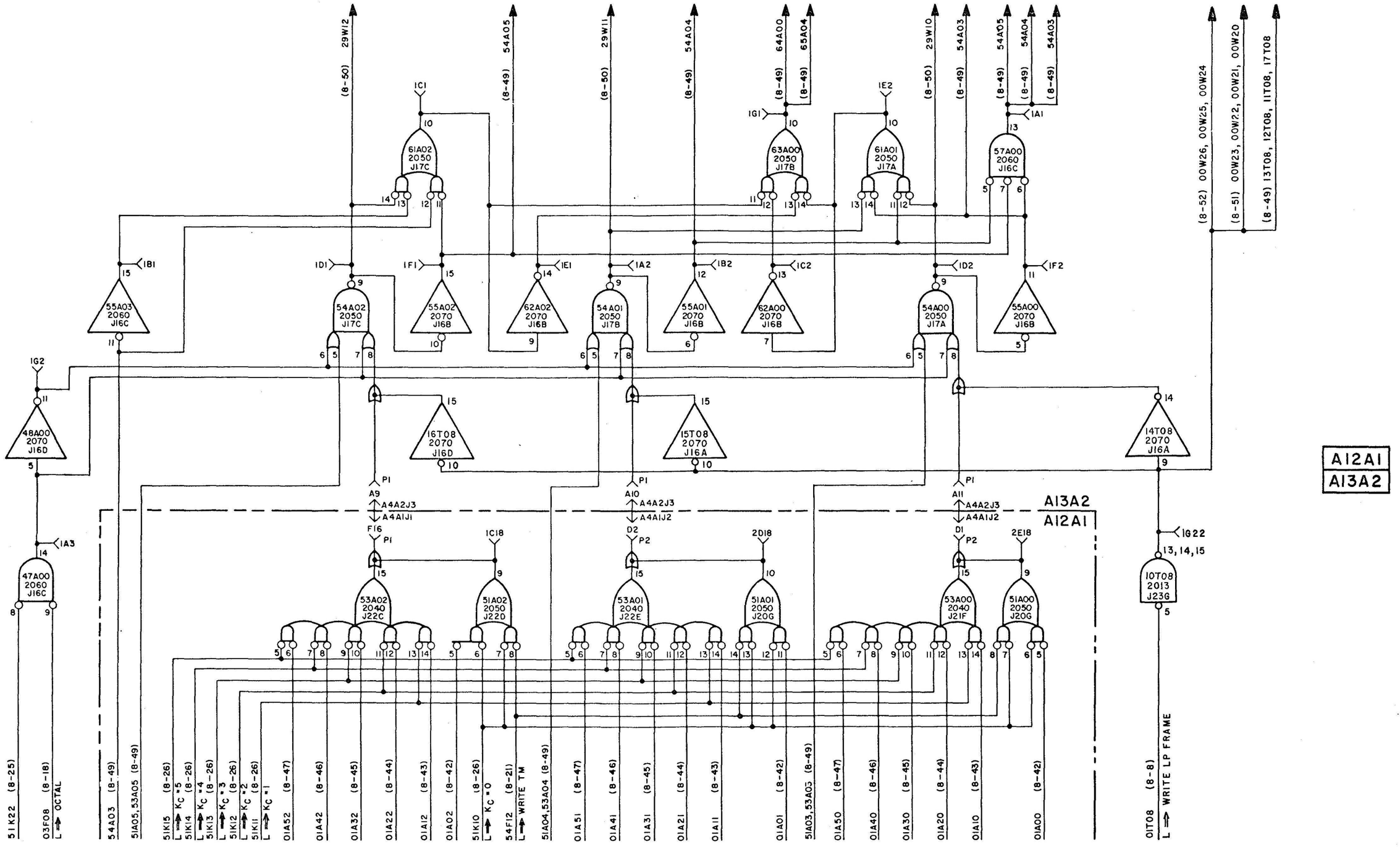

REPRODUCED FROM UNIVAC DWG NO 7030220.

Figure 8-48. Write Encoder, Part 1, Functional Schematic

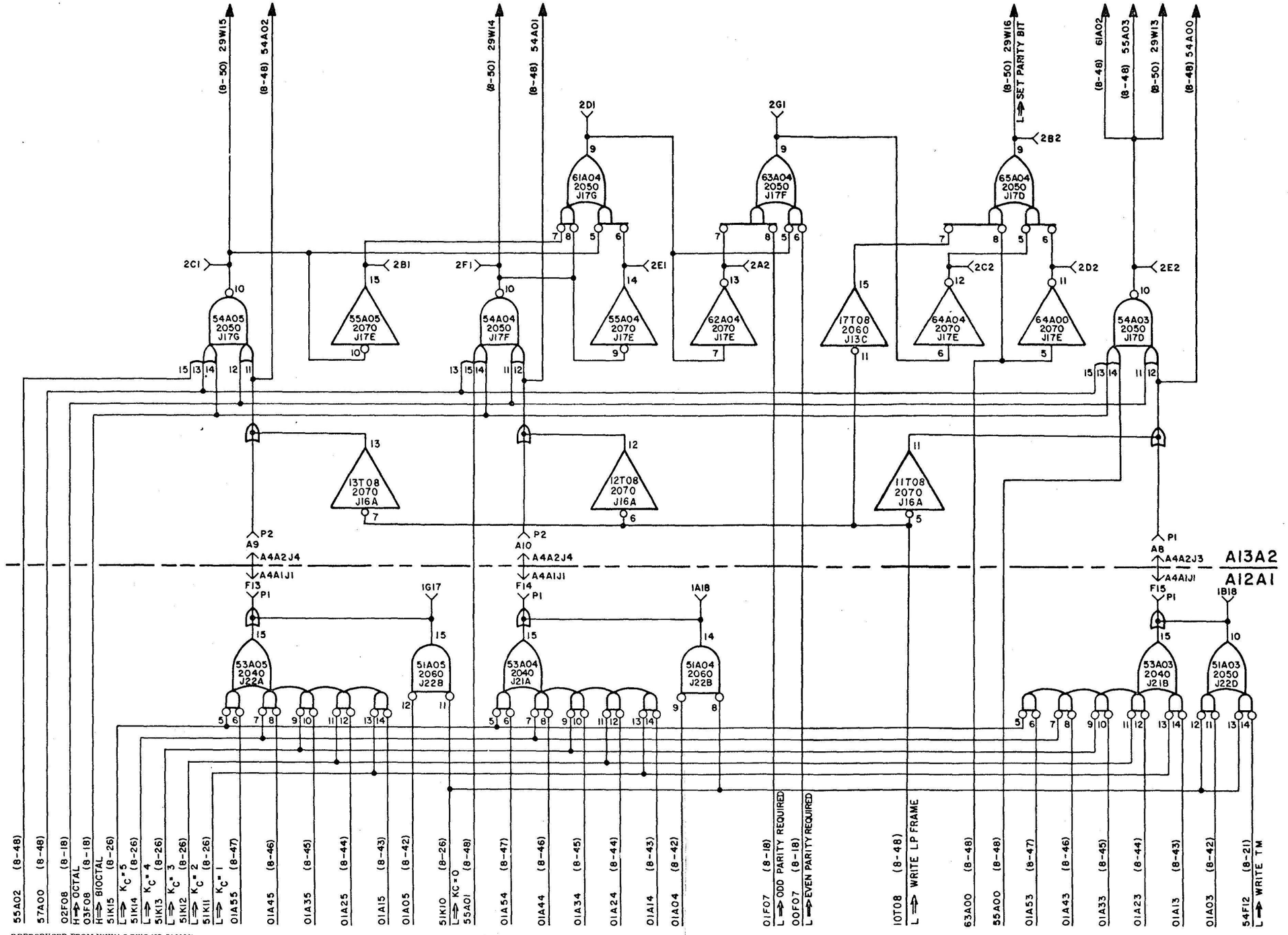

REPRODUCED FROM UNIVAC DWG NO 7030221.

Figure 8-49. Write Encoder, Part 2, Functional Schematic

REVISED AUGUST 7, 1972

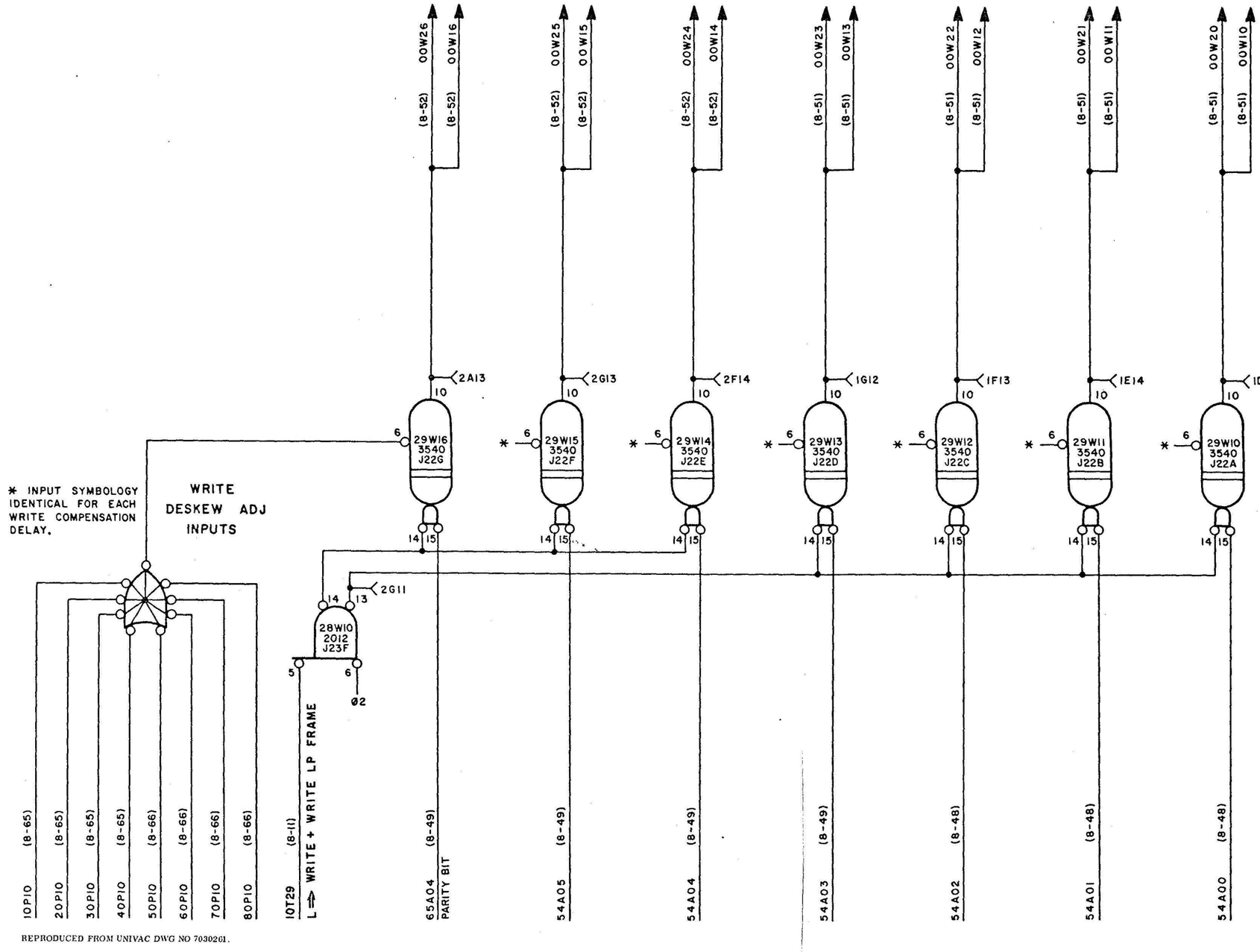

REPRODUCED FROM UNIVAC DWG NO 7030261.

A13A2

Figure 8-50. Write Compensation Delays, Functional Schematic

REVISED AUGUST 7, 1972

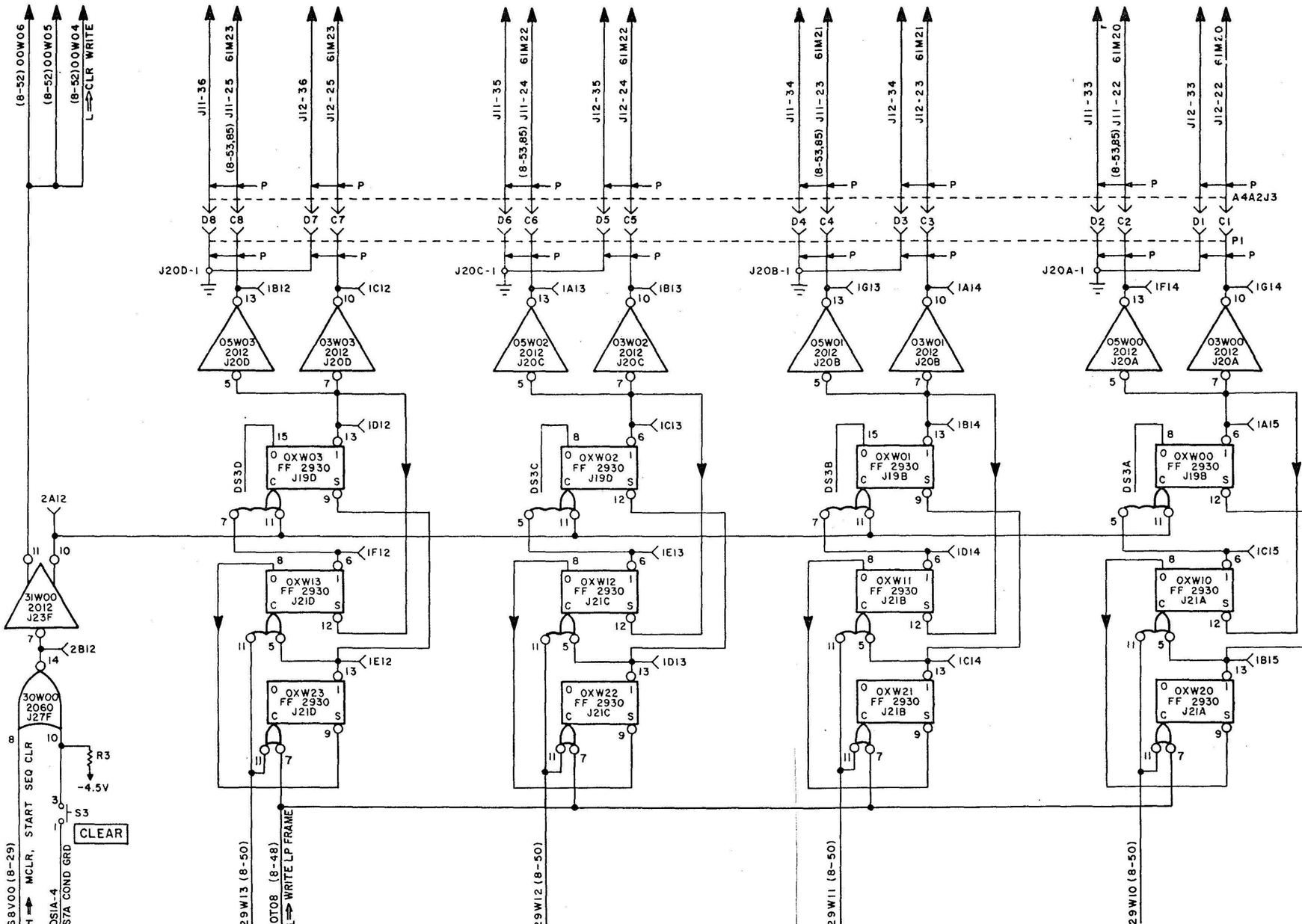

REPRODUCED FROM UNIVAC DWG NO 7030262.

A13A2

NOTES:

1. JACK J12 IS CONNECTED BY JUMPER CABLE TO JACK J1 OF RIGHT ADD-ON UNIT (IF USED) (REFER TO INTERCONNECTION DIAGRAM FIGURE 2-9).
2. JACK J11 IS CONNECTED BY JUMPER CABLE TO JACK J1 OF TAPE HANDLER(S) ON LEFT OF MAGNETIC TAPE CONTROL (REFER TO INTERCONNECTION DIAGRAM FIGURE 2-9).

Figure 8-51. Write Register, Bits 00-03, Functional Schematic

REVISED AUGUST 7, 1972

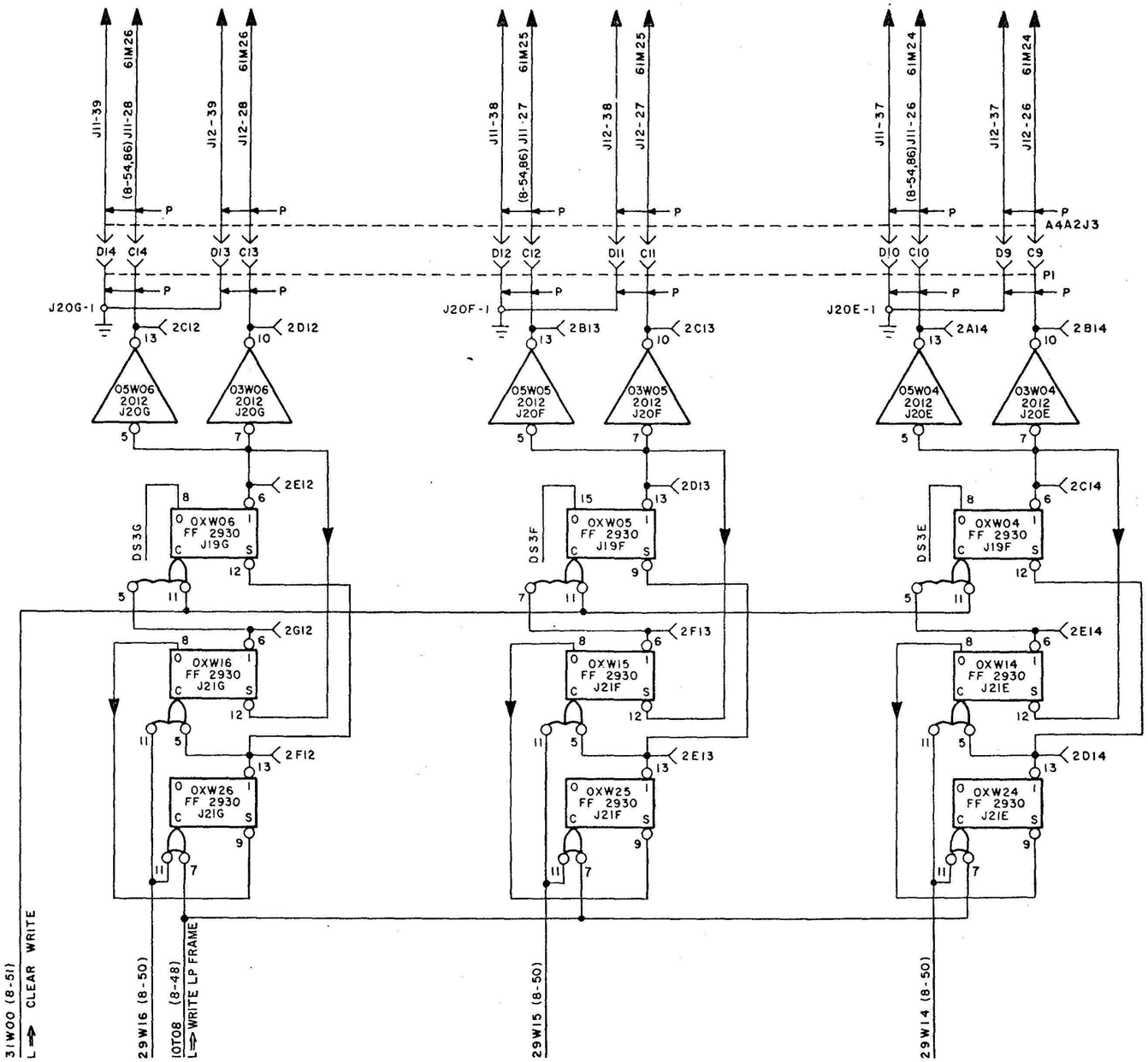

REPRODUCED FROM UNIVAC DWG NO 7030263.

A13A2

NOTES:

1. JACK J12 IS CONNECTED BY JUMPER CABLE) TO JACK J1 OF RIGHT ADD-ON UNIT (IF USED) (REFER TO INTERCONNECTION DIAGRAM FIGURE 2-9).
2. JACK J11 IS CONNECTED BY JUMPER CABLE) TO JACK J1 OF TAPE HANDLER(S) ON LEFT OF MAGNETIC TAPE CONTROL (REFER TO INTERCONNECTION DIAGRAM FIGURE 2-9).

Figure 8-52. Write Register, Bits 04-06, Functional Schematic

REVISED AUGUST 7, 1972

REVISIONS						
SYM	ZONE	EIR	DESCRIPTION	CAN	DATE	APPROVED

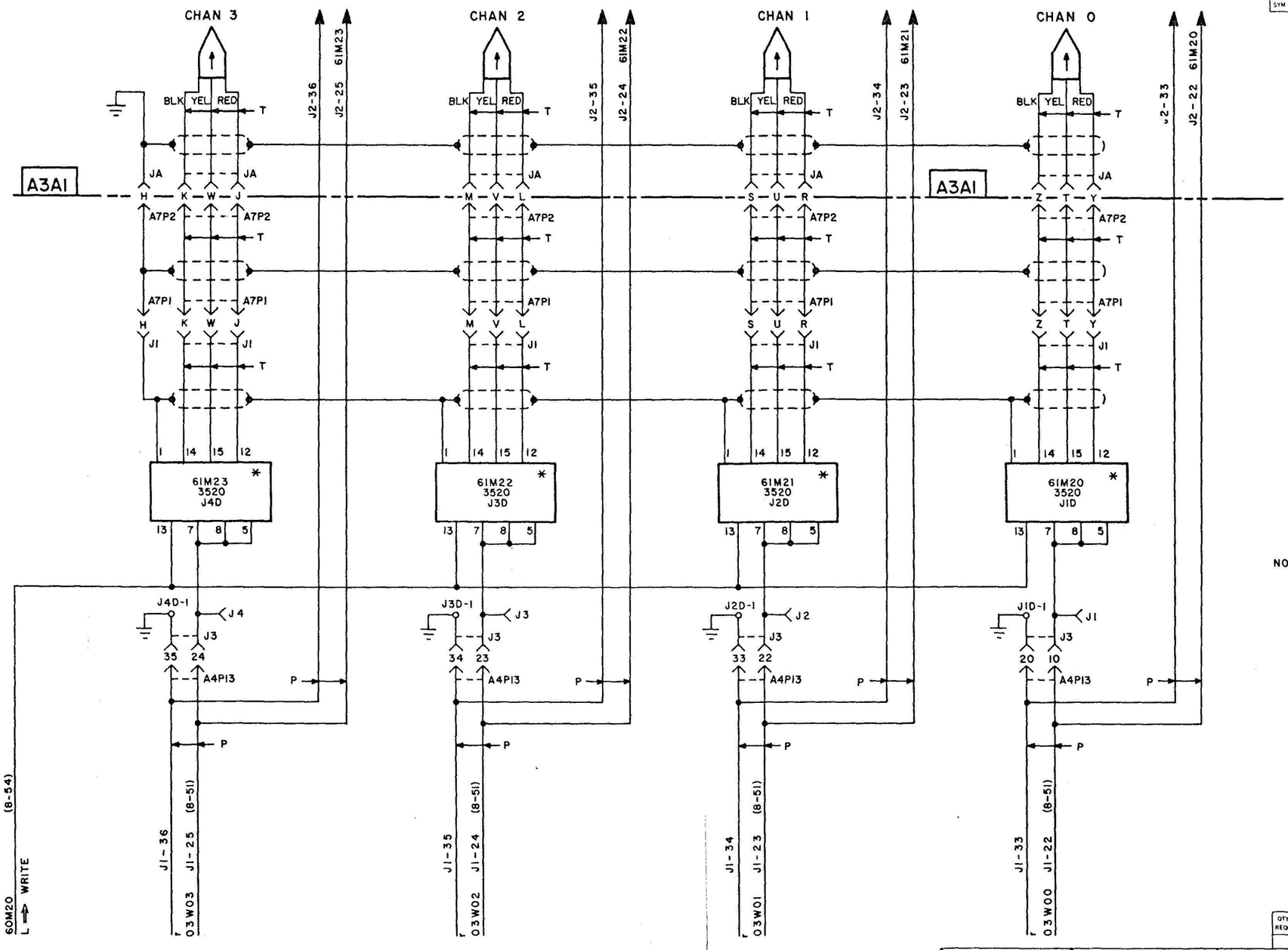

A3A3

NOTE:

1. -26.5V FROM J8C-15 TO PIN 9 OF J1D THRU J7D.
2. INPUTS TO JACK J1 ARE (VIA JUMPER CABLE) FROM JACK J11 OR J12 OF MAGNETIC TAPE CONTROL OR FROM JACK J2 OF ADJACENT TAPE HANDLER (REFER TO INTERCONNECTION DIAGRAM FIGURE 2-9).
3. OUTPUTS OF JACK J2 ARE (VIA JUMPER CABLE) TO JACK J1 OF ADJACENT TAPE HANDLER (REFER TO INTER-CONNECTION DIAGRAM FIGURE 2-9).
4. * WRITE AMPLIFIER MODULE.

FIGURE 8-53

QTY REQD	FIND	REF DES	CODE IDENT	DWG SIZE	PART OR IDENTIFYING NO.	NOMENCLATURE OR DESCRIPTION

LIST OF MATERIAL

IDENT NO. 7030249-00

THIS DOCUMENT CONTAINS CONFIDENTIAL INFORMATION OF THE UNIVAC DIVISION OF SPERRY RAND CORPORATION AND IS FURNISHED PURSUANT TO THE FOLLOWING INSTRUMENT

ON THE UNDERSTANDING THAT THIS DOCUMENT AND THE INFORMATION THEREON MAY NOT BE DEALT WITH IN ANY MANNER EXCEPT FOR THE PURPOSES FOR WHICH IT IS FURNISHED WITHOUT THE WRITTEN CONSENT OF THE UNIVAC DIVISION OF SPERRY RAND CORPORATION

UNLESS OTHERWISE SPECIFIED
DIMENSION IN INCHES TOLERANCE ON
2 PLACE DECIMALS ±
3 PLACE DECIMALS ±
ANGLES ±
HOLE DIAMETER TOLERANCE
0 THRU 250 +.003 −.002
251 THRU 500 +.005 −.003
501 & LARGER +.010 −.005
THREADS EXT CL 2A, INT CL 2B
MATERIAL
FINISH
NEXT ASSY
EQUIPMENT
APPLICATION
COMMODITY CODE

LAYOUT		DATE
DRAFTSMAN J R CURTIS		5-11-65
CHECKER B.POPOV	T&B BP	10/28/65
ENGINEER R.D.MCCUMBER	R.D.M	10-28-65
APPROVAL K Hensley		10-28-65

CLASS A

UNIVAC
DIVISION OF SPERRY RAND CORPORATION

TITLE
FUNCTIONAL SCHEMATIC, 1541 WRITE AMPLIFIERS, BITS 0-3

CODE IDENT NO.	SIZE	DWG NO.
90536	D	7030249

SCALE | WEIGHT | SHEET 1 OF 1

REVISIONS						
SYM	ZONE	EIR	DESCRIPTION	CHK	DATE	APPROVED
A		69697	SEE EIR		4-1-66	

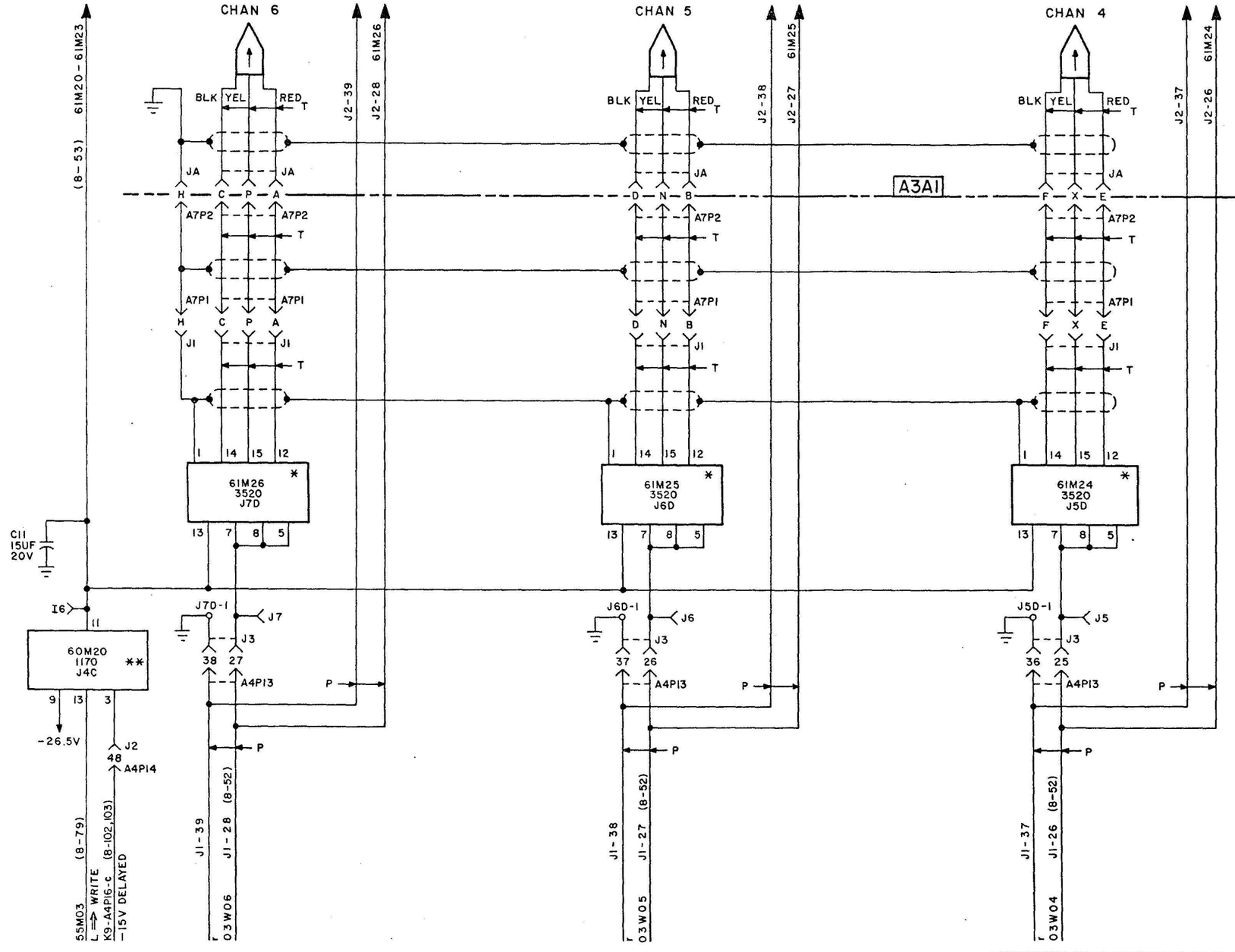

NOTE:

1. -26.5V FROM J8C-15 TO PIN 9 OF JID THRU J7D.
2. INPUTS TO JACK J1 ARE (VIA JUMPER CABLE) FROM JACK J11 OR J12 OF MAGNETIC TAPE CONTROL OR FROM JACK J2 OF ADJACENT TAPE HANDLER (REFER TO INTERCONNECTION DIAGRAM FIGURE 2-9).
3. OUTPUTS OF JACK J2 ARE (VIA JUMPER CABLE) TO JACK J1 OF ADJACENT TAPE HANDLER (REFER TO INTERCONNECTION DIAGRAM FIGURE 2-9).
4. * WRITE AMPLIFIER MODULE.
5. ** WRITE ENABLE AMPLIFIER MODULE.

A3A3

FIGURE 8-54

LIST OF MATERIAL

QTY REQD	FIND	REF DES	CODE IDENT	DWG SIZE	PART OR IDENTIFYING NO.	NOMENCLATURE OR DESCRIPTION

IDENT NO. 7030250-00

THIS DOCUMENT CONTAINS CONFIDENTIAL INFORMATION OF THE UNIVAC DIVISION OF SPERRY RAND CORPORATION AND IS FURNISHED PURSUANT TO THE FOLLOWING INSTRUMENT

ON THE UNDERSTANDING THAT THIS DOCUMENT AND THE INFORMATION CONTAINED MAY NOT BE DISCLOSED, USED OR MANUFACTURED EXCEPT AS THEY, THOSE OF THAT INSTRUMENT OR AS OTHERWISE PERMITTED IN WRITING BY THE UNIVAC DIVISION OF SPERRY RAND CORPORATION

UNLESS OTHERWISE SPECIFIED
DIMENSION IN INCHES TOLERANCE ON
2 PLACE DECIMALS ±
3 PLACE DECIMALS ±
ANGLES ±
HOLE DIAMETER TOLERANCE
0 THRU .250 + .003 − .002
.251 THRU .500 + .005 − .003
.501 & LARGER + .010 − .005
THREADS EXT CL 2A, INT CL 2B
MATERIAL
FINISH
NEXT ASSY
EQUIPMENT
APPLICATION
COMMODITY CODE

LAYOUT		DATE
DRAFTSMAN J R CURTIS		5-11-65
CHECKER B. POPOV	2/08 BP	10-28-65
ENGINEER R.D. MCCUMBER	R.D.M.	10-28-65
APPROVAL		10-28-65

CLASS A

UNIVAC
DIVISION OF SPERRY RAND CORPORATION

TITLE
FUNCTIONAL SCHEMATIC,
1541 WRITE AMPLIFIERS, BITS 4-6

CODE IDENT NO.	SIZE	DWG NO.
90536	D	7030250

SCALE | WEIGHT | SHEET 1 OF 1

REVISIONS						
SYM	ZONE	EIR	DESCRIPTION	CHK	DATE	APPROVED

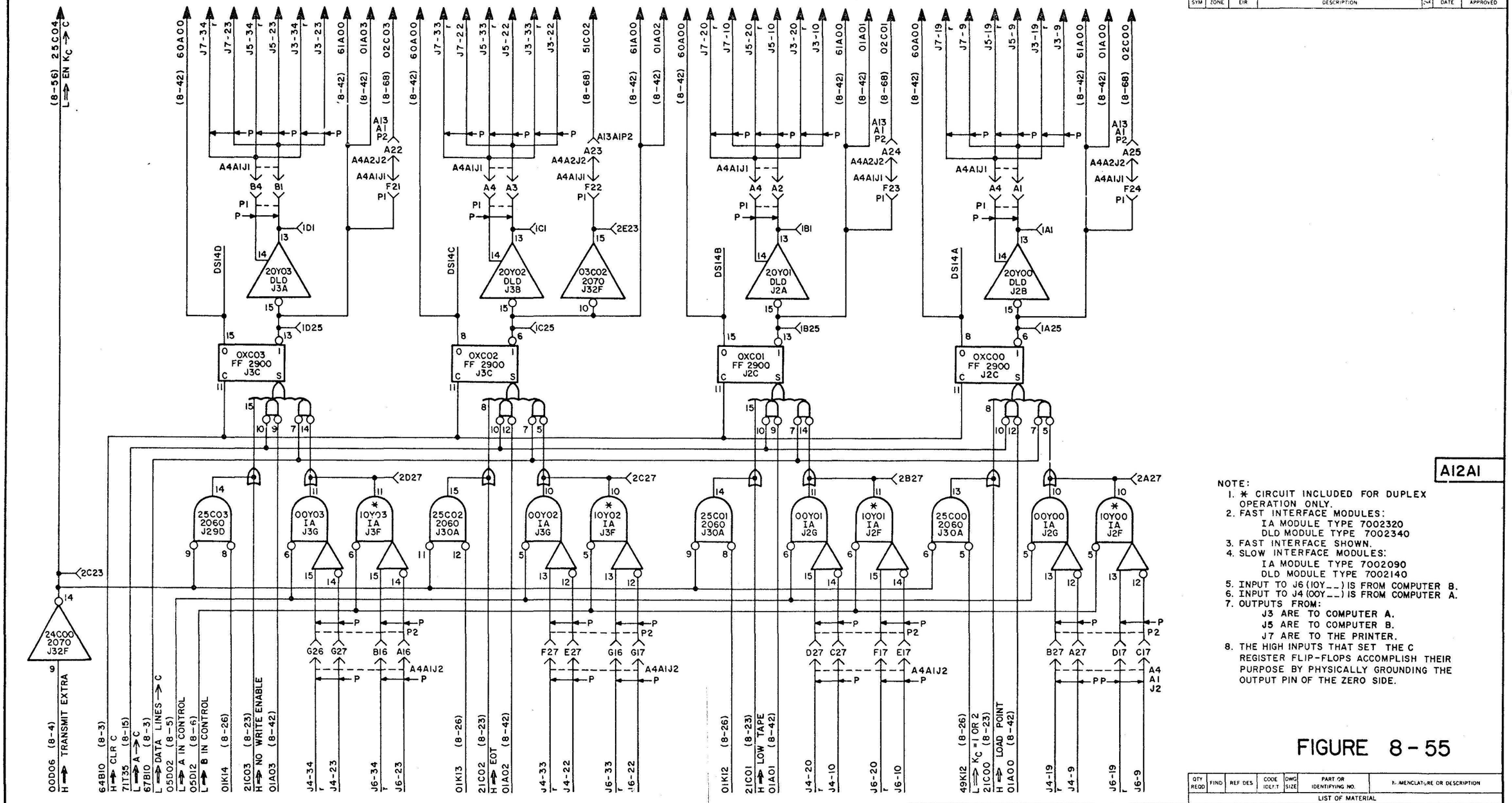

A12A1

NOTE:
1. * CIRCUIT INCLUDED FOR DUPLEX OPERATION ONLY.
2. FAST INTERFACE MODULES:
   IA MODULE TYPE 7002320
   DLD MODULE TYPE 7002340
3. FAST INTERFACE SHOWN.
4. SLOW INTERFACE MODULES:
   IA MODULE TYPE 7002090
   DLD MODULE TYPE 7002140
5. INPUT TO J6 (10Y__) IS FROM COMPUTER B.
6. INPUT TO J4 (00Y__) IS FROM COMPUTER A.
7. OUTPUTS FROM:
   J3 ARE TO COMPUTER A.
   J5 ARE TO COMPUTER B.
   J7 ARE TO THE PRINTER.
8. THE HIGH INPUTS THAT SET THE C REGISTER FLIP-FLOPS ACCOMPLISH THEIR PURPOSE BY PHYSICALLY GROUNDING THE OUTPUT PIN OF THE ZERO SIDE.

FIGURE 8-55

QTY REQD	FIND	REF DES	CODE IDENT	DWG SIZE	PART OR IDENTIFYING NO.	NOMENCLATURE OR DESCRIPTION

LIST OF MATERIAL

IDENT NO. 7030206-00

THIS DOCUMENT CONTAINS CONFIDENTIAL INFORMATION OF THE UNIVAC DIVISION OF SPERRY RAND CORPORATION AND IS FURNISHED PURSUANT TO THE FOLLOWING INSTRUMENT

ON THE UNDERSTANDING THAT THIS DOCUMENT AND THE INFORMATION THEREIN MAY NOT BE DEALT WITH IN ANY MANNER EXCEPT FOR THE PURPOSE OF THAT INSTRUMENT OR AS OTHERWISE PERMITTED IN WRITING BY THE UNIVAC DIVISION OF SPERRY RAND CORPORATION

UNLESS OTHERWISE SPECIFIED
DIMENSION IN INCHES TOLERANCE ON
2 PLACE DECIMALS ± | 3 PLACE DECIMALS ± | ANGLES ±
HOLE DIAMETER TOLERANCE
0 THRU .250 +.003 −.002 | .251 THRU .500 +.005 −.003 | .501 & LARGER +.010 −.005
THREADS: EXT CL 2A, INT CL 2B
MATERIAL
FINISH
NEXT ASSY | EQUIPMENT
APPLICATION
COMMODITY CODE

LAYOUT
DRAFTSMAN J R CURTIS 3-3-65
CHECKER B. POPOV 3/08 BP 10/28/65
ENGINEER R.D. MCCUMBER R.D.M. 10-28-65
APPROVAL

CLASS A

UNIVAC
DIVISION OF SPERRY RAND CORPORATION

TITLE
FUNCTIONAL SCHEMATIC, C REGISTER, BITS 00-03

CODE IDENT NO. 90536 | SIZE D | DWG NO. 7030206
SCALE | WEIGHT | SHEET 1 OF 1

REVISIONS						
SYM	ZONE	EIR	DESCRIPTION	CHK	DATE	APPROVED

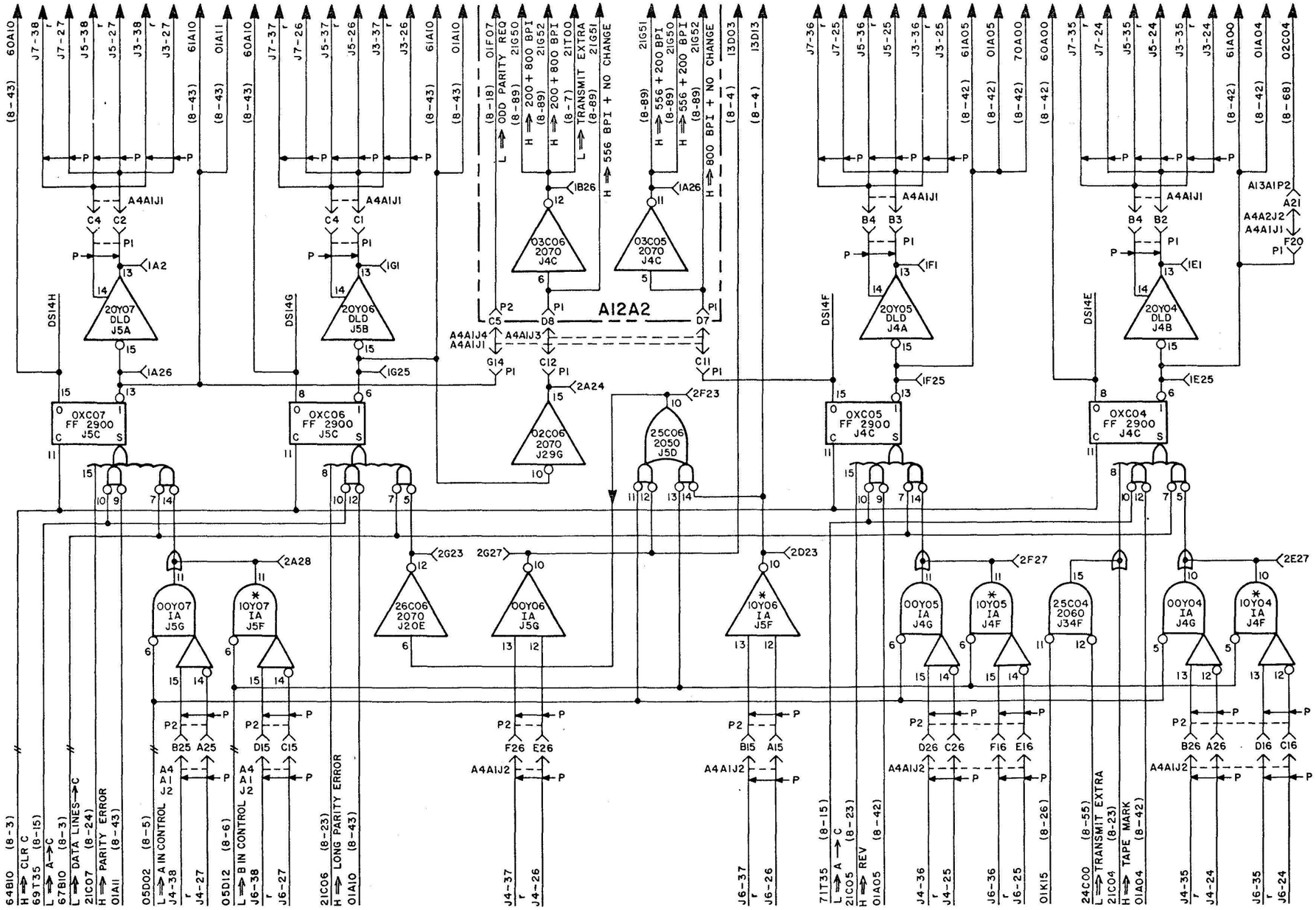

A12A1

NOTE:
1. * CIRCUIT INCLUDED FOR DUPLEX OPERATION ONLY.
2. FAST INTERFACE MODULES:
   IA MODULE TYPE 7002320
   DLD MODULE TYPE 7002340
3. FAST INTERFACE SHOWN.
4. SLOW INTERFACE MODULES:
   IA MODULE TYPE 7002090
   DLD MODULE TYPE 7002140
5. INPUT TO J6(10Y__) IS FROM COMPUTER B.
6. INPUT TO J4(00Y__) IS FROM COMPUTER A.
7. OUTPUTS FROM:
   J3 ARE TO COMPUTER A.
   J5 ARE TO COMPUTER B.
   J7 ARE TO THE PRINTER.
8. THE HIGH INPUTS THAT SET THE C REGISTER FLIP-FLOPS ACCOMPLISH THEIR PURPOSE BY PHYSICALLY GROUNDING THE OUTPUT PIN OF THE ZERO SIDE.

FIGURE 8-56

QTY REQD	FIND	REF DES	CODE IDENT	DWG SIZE	PART OR IDENTIFYING NO.	NOMENCLATURE OR DESCRIPTION

LIST OF MATERIAL

IDENT NO. 7030207-00

THIS DOCUMENT CONTAINS CONFIDENTIAL INFORMATION OF THE UNIVAC DIVISION OF SPERRY RAND CORPORATION AND IS FURNISHED PURSUANT TO THE FOLLOWING AGREEMENT

ON THE UNDERSTANDING THAT THIS DOCUMENT AND THE INFORMATION THEREIN MAY NOT BE DISCLOSED WITHOUT THE MANUFACTURING OR SELLING OF EQUIPMENT OR APPARATUS EMBODYING SUCH INFORMATION OR AS OTHERWISE AGREED IN WRITING BY THE UNIVAC DIVISION OF SPERRY RAND CORPORATION

UNLESS OTHERWISE SPECIFIED
DIMENSION IN INCHES. TOLERANCE ON 2 PLACE DECIMALS ± | 3 PLACE DECIMALS ± | ANGLES ±
HOLE DIAMETER TOLERANCE
0 THRU 250 +.003 −.002 | 251 THRU 500 +.005 −.003 | 501 & LARGER +.010 −.005
THREADS: EXT CL 2A, INT CL 2B
MATERIAL
FINISH
NEXT ASSY | EQUIPMENT
APPLICATION
COMMODITY CODE

LAYOUT		DATE
DRAFTSMAN	J R CURTIS	3-8-65
CHECKER	B. POPOV	
ENGINEER	R.D. MCCUMBER	R.D.M. 10-28-65
APPROVED		10-28-65

CLASS A

UNIVAC
DIVISION OF SPERRY RAND CORPORATION

TITLE
FUNCTIONAL SCHEMATIC,
C REGISTER, BITS 04—07

CODE IDENT NO.	SIZE	DWG NO.
90536	D	7030207

SCALE | WEIGHT | SHEET 1 OF 1

REVISIONS						
SYM	ZONE	EIR	DESCRIPTION	CHG	DATE	APPROVED

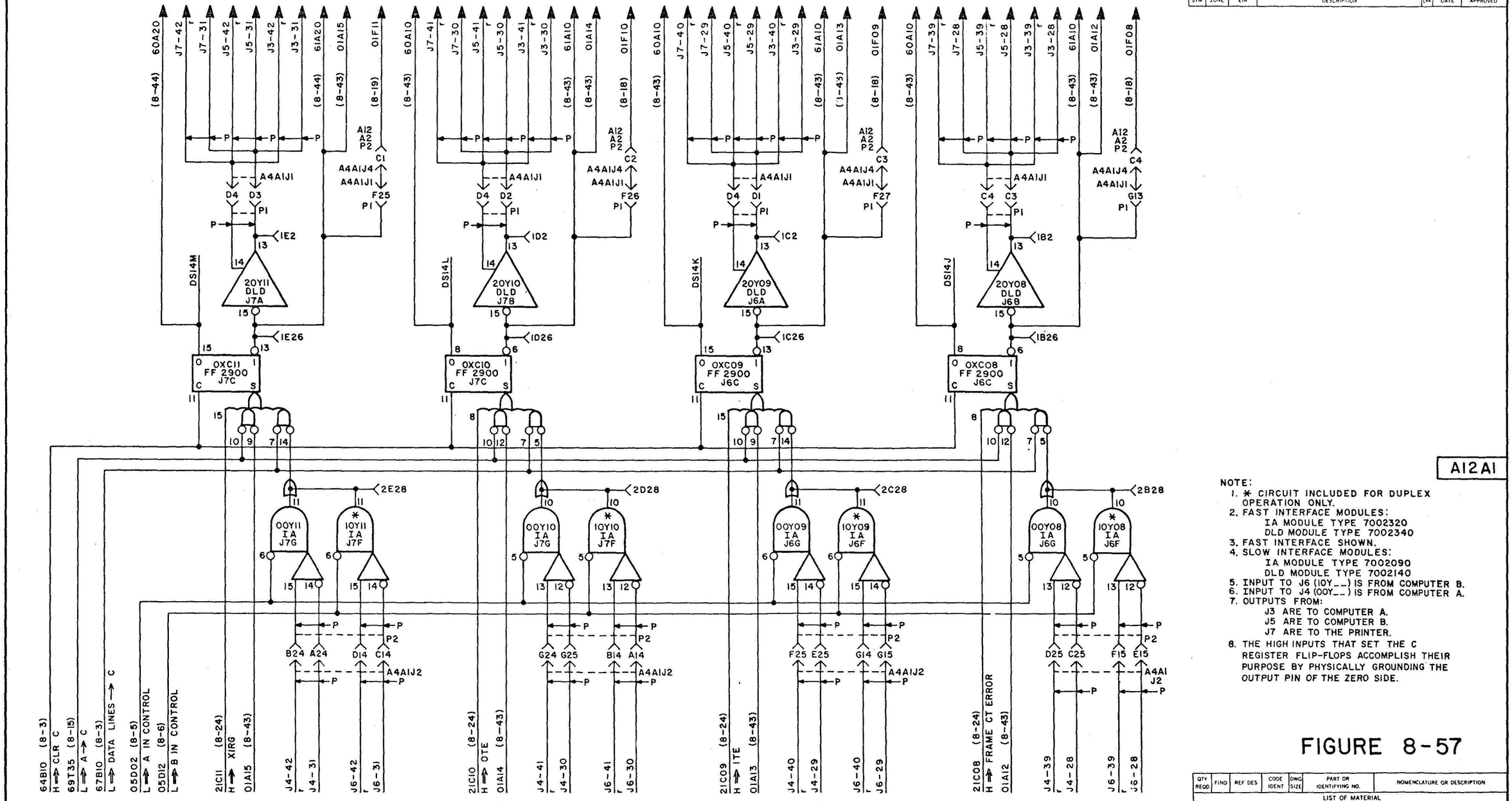

A12A1

NOTE:
1. * CIRCUIT INCLUDED FOR DUPLEX OPERATION ONLY.
2. FAST INTERFACE MODULES:
   IA MODULE TYPE 7002320
   DLD MODULE TYPE 7002340
3. FAST INTERFACE SHOWN.
4. SLOW INTERFACE MODULES:
   IA MODULE TYPE 7002090
   DLD MODULE TYPE 7002140
5. INPUT TO J6 (10Y__) IS FROM COMPUTER B.
6. INPUT TO J4 (00Y__) IS FROM COMPUTER A.
7. OUTPUTS FROM:
   J3 ARE TO COMPUTER A.
   J5 ARE TO COMPUTER B.
   J7 ARE TO THE PRINTER.
8. THE HIGH INPUTS THAT SET THE C REGISTER FLIP-FLOPS ACCOMPLISH THEIR PURPOSE BY PHYSICALLY GROUNDING THE OUTPUT PIN OF THE ZERO SIDE.

FIGURE 8-57

QTY REQD	FIND	REF DES	CODE IDENT	DWG SIZE	PART OR IDENTIFYING NO.	NOMENCLATURE OR DESCRIPTION

LIST OF MATERIAL

IDENT NO. 7030208-00

THIS DOCUMENT CONTAINS CONFIDENTIAL INFORMATION OF THE UNIVAC DIVISION OF SPERRY RAND CORPORATION AND IS FURNISHED PURSUANT TO THE FOLLOWING INSTRUMENT

ON THE UNDERSTANDING THAT THIS DOCUMENT AND THE INFORMATION THEREIN WILL NOT BE DEALT WITH IN ANY MANNER EXCEPT IN DUE PURSUANCE OF THAT INSTRUMENT OR AS OTHERWISE AUTHORIZED IN WRITING BY THE UNIVAC DIVISION OF SPERRY RAND CORPORATION

UNLESS OTHERWISE SPECIFIED
DIMENSION IN INCHES. TOLERANCE ON
2 PLACE DECIMALS ±
3 PLACE DECIMALS ±
ANGLES ±
HOLE DIAMETER TOLERANCE
0 THRU .250 +.003 −.002
.251 THRU .500 +.005 −.003
.501 & LARGER +.010 −.005
THREADS EXT CL 2A, INT CL 2B
MATERIAL
FINISH
NEXT ASSY
EQUIPMENT
APPLICATION
COMMODITY CODE

LAYOUT		DATE
DRAFTSMAN	J R CURTIS	3-11-65
CHECKER	B. POPOV	11/28
ENGINEER	R.D.MCCUMBER	10-28-65
APPROVAL		10-28-65

CLASS A

UNIVAC
DIVISION OF SPERRY RAND CORPORATION

TITLE
FUNCTIONAL SCHEMATIC, C REGISTER, BITS 08—11

CODE IDENT NO.	SIZE	DWG NO.
90536	D	7030208

SCALE | WEIGHT | SHEET 1 OF 1

REVISIONS						
SYM	ZONE	LTR	DESCRIPTION	CHG	DATE	APPROVED

A12A1

NOTE:
1. * CIRCUIT INCLUDED FOR DUPLEX OPERATION ONLY.
2. FAST INTERFACE MODULES:
   IA MODULE TYPE 7002320
   DLD MODULE TYPE 7002340
3. FAST INTERFACE SHOWN.
4. SLOW INTERFACE MODULES:
   IA MODULE TYPE 7002090
   DLD MODULE TYPE 7002140
5. INPUT TO J6 (IOY__) IS FROM COMPUTER B.
6. INPUT TO J4 (OOY__) IS FROM COMPUTER A.
7. OUTPUTS FROM:
   J3 ARE TO COMPUTER A.
   J5 ARE TO COMPUTER B.
   J7 ARE TO THE PRINTER.
8. THE HIGH INPUTS THAT SET THE C REGISTER FLIP-FLOPS ACCOMPLISH THEIR PURPOSE BY PHYSICALLY GROUNDING THE OUTPUT PIN OF THE ZERO SIDE.

FIGURE 8-58

QTY REQD	FIND	REF DES	CODE IDENT	DWG SIZE	PART OR IDENTIFYING NO.	NOMENCLATURE OR DESCRIPTION

LIST OF MATERIAL

IDENT NO. 7030209-00

THIS DOCUMENT CONTAINS CONFIDENTIAL INFORMATION OF THE UNIVAC DIVISION OF SPERRY RAND CORPORATION AND IS FURNISHED PURSUANT TO THE FOLLOWING INSTRUMENT

ON THE UNDERSTANDING THAT THIS DOCUMENT AND THE INFORMATION THEREIN MAY NOT BE DEALT WITH IN ANY MANNER EXCEPT FOR THE PURPOSES OF THAT INSTRUMENT OR AS OTHERWISE PERMITTED IN WRITING BY THE UNIVAC DIVISION OF SPERRY RAND CORPORATION

UNLESS OTHERWISE SPECIFIED
DIMENSION IN INCHES. TOLERANCE ON
2 PLACE DECIMALS ± | 3 PLACE DECIMALS ± | ANGLES ±
HOLE DIAMETER TOLERANCE
0 THRU .250 +.003 −.002 | .251 THRU .500 +.005 −.005 | .501 & LARGER +.010 −.005
THREADS: EXT CL 2A, INT CL 2B
MATERIAL
FINISH
NEXT ASSY | EQUIPMENT
APPLICATION
COMMODITY CODE

		DATE
LAYOUT		
DRAFTSMAN	F. MANNING	3-16-65
CHECKER	B. POPOV	5-11-65
ENGINEER	R.D. MCCUMBER	10-28-65
APPROVAL		

CLASS A

UNIVAC
DIVISION OF SPERRY RAND CORPORATION

TITLE
FUNCTIONAL SCHEMATIC, C REGISTER, BITS 12—15

CODE IDENT NO.	SIZE	DWG NO.
90536	D	7030209

SCALE | WEIGHT | SHEET 1 OF 1

REVISIONS					
SYM	ZONE	EIR	DESCRIPTION	BY	DATE	APPROVED
A		69714	SEE EIR		4-7-66	A.W.B.

A12A1

NOTE:
1. * CIRCUIT INCLUDED FOR DUPLEX OPERATION ONLY.
2. FAST INTERFACE MODULES:
   IA MODULE TYPE 7002320
   DLD MODULE TYPE 7002340
3. FAST INTERFACE SHOWN.
4. SLOW INTERFACE MODULES:
   IA MODULE TYPE 7002090
   DLD MODULE TYPE 7002140
5. INPUT TO J6 (10Y__) IS FROM COMPUTER B.
6. INPUT TO J4 (00Y__) IS FROM COMPUTER A.
7. OUTPUTS FROM:
   J3 ARE TO COMPUTER A.
   J5 ARE TO COMPUTER B.
   J7 ARE TO THE PRINTER.

FIGURE 8-59

QTY REQD	FIND	REF DES	CODE IDENT	DWG SIZE	PART OR IDENTIFYING NO.	NOMENCLATURE OR DESCRIPTION

LIST OF MATERIAL

IDENT NO. 7030210-00

UNLESS OTHERWISE SPECIFIED: DIMENSION IN INCHES, TOLERANCE ON 2 PLACE DECIMALS ±, 3 PLACE DECIMALS ±, ANGLES ±. HOLE DIAMETER TOLERANCE: 0 THRU .250 +.003 -.002; .251 THRU .500 +.005 -.003; 501 & LARGER +.010 -.005. THREADS EXTERNAL INT CL 2B. MATERIAL. FINISH. NEXT ASSY. APPLICATION. DATE CODE. EQUIPMENT.

		DATE
LAYOUT		
DRAFTSMAN	J R CURTIS	3-17-65
CHECKER	B. POPOV	10-28-65
ENGINEER	R.D. MCCUMBER	10-28-65
APPROVED		10-28-65

CLASS A

UNIVAC
DIVISION OF SPERRY RAND CORPORATION

TITLE
FUNCTIONAL SCHEMATIC,
C REGISTER, BITS 16-19

CODE IDENT NO.	SIZE	DWG NO.
90536	D	7030210

SCALE | WEIGHT | SHEET 1 OF 1

REVISIONS						
SYM	ZONE	EIR	DESCRIPTION	CHK	DATE	APPROVED

A12A1

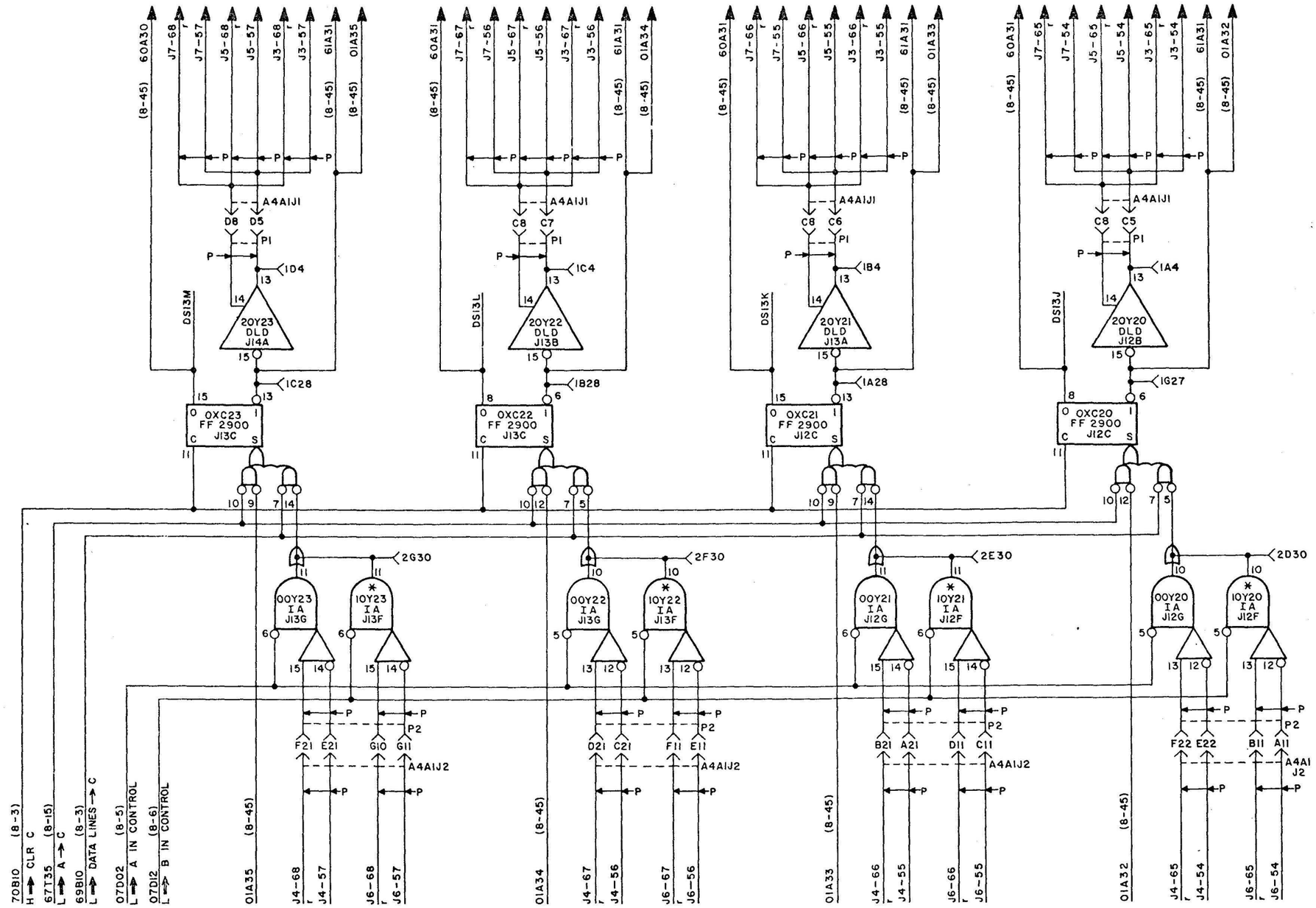

NOTE:
1. * CIRCUIT INCLUDED FOR DUPLEX OPERATION ONLY.
2. FAST INTERFACE MODULES:
   IA MODULE TYPE 7002320
   DLD MODULE TYPE 7002340
3. FAST INTERFACE SHOWN.
4. SLOW INTERFACE MODULES:
   IA MODULE TYPE 7002090
   DLD MODULE TYPE 7002140
5. INPUT TO J6 (10Y__) IS FROM COMPUTER B.
6. INPUT TO J4 (00Y__) IS FROM COMPUTER A.
7. OUTPUTS FROM:
   J3 ARE TO COMPUTER A.
   J5 ARE TO COMPUTER B.
   J7 ARE TO THE PRINTER.

FIGURE 8-60

QTY REQD	FIND	REF DES	CODE IDENT	DWG SIZE	PART OR IDENTIFYING NO.	NOMENCLATURE OR DESCRIPTION

LIST OF MATERIAL

IDENT NO. 7030211-00

UNLESS OTHERWISE SPECIFIED
DIMENSION IN INCHES TOLERANCE ON
2 PLACE DECIMALS ± 3 PLACE DECIMALS ± ANGLES
HOLE DIAMETER TOLERANCE
0 THRU .250 +.003 −.002 | .251 THRU .500 +.005 −.003 | .501 & LARGER +.010 −.005
THREADS, EXT CL 2A, INT CL 2B
MATERIAL
NEXT ASSY | EQUIPMENT
APPLICATION
COMMODITY CODE
FINISH

LAYOUT
DRAFTSMAN J R CURTIS 31065
CHECKER B POPOV
ENGINEER R.D.MCCUMBER
APPROVED

UNIVAC
DIVISION OF SPERRY RAND CORPORATION

CLASS A
TITLE FUNCTIONAL SCHEMATIC, C REGISTER, BITS 20—23
CODE IDENT NO. 90536
SIZE D
DWG NO. 7030211
SCALE
WEIGHT
SHEET 1 OF 1

REVISIONS						
SYM	ZONE	EIR	DESCRIPTION	CHK	DATE	APPROVED

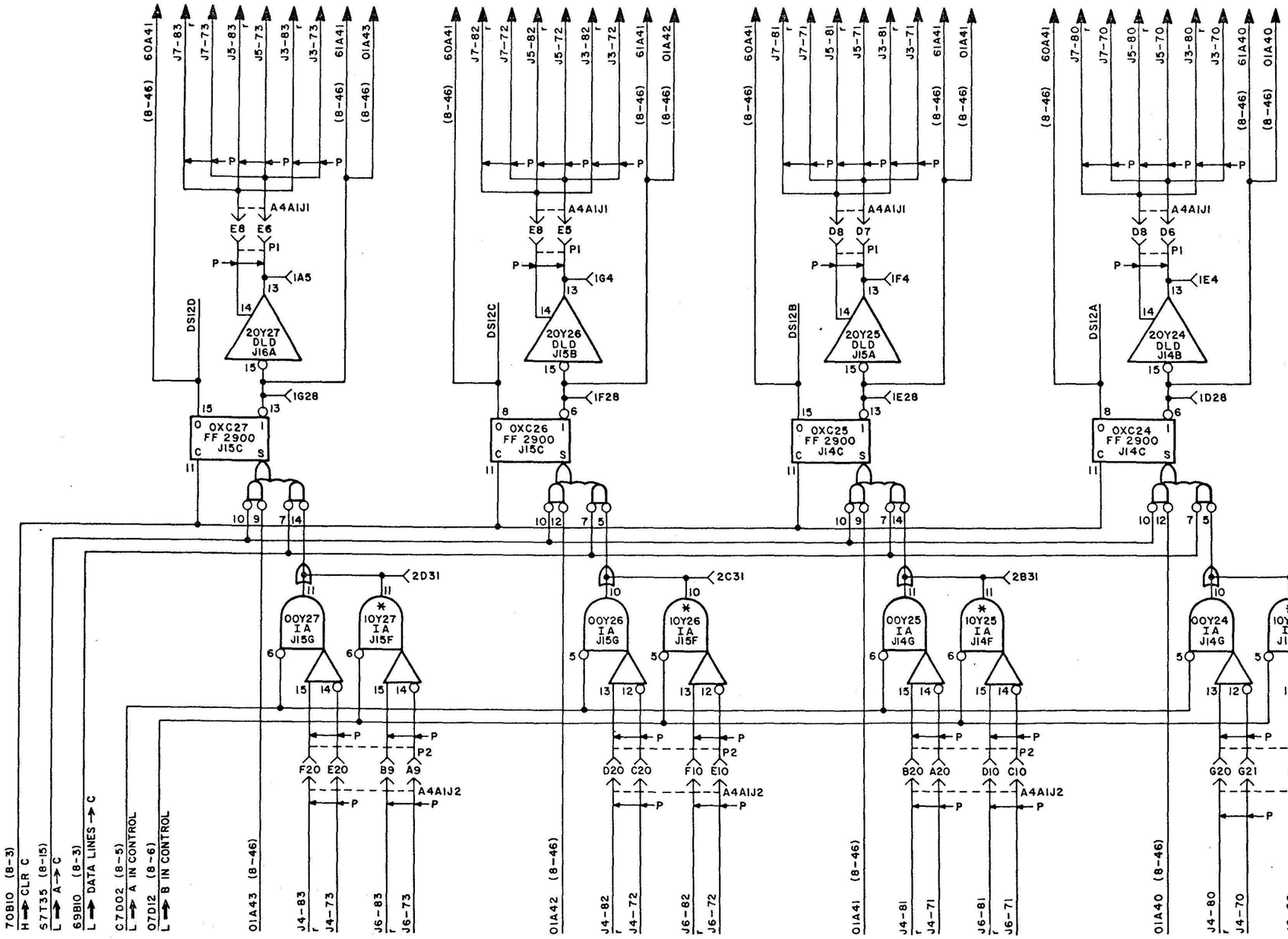

A12A1

NOTE:
1. * CIRCUIT INCLUDED FOR DUPLEX OPERATION ONLY.
2. FAST INTERFACE MODULES:
   IA MODULE TYPE 7002320
   DLD MODULE TYPE 7002340
3. FAST INTERFACE SHOWN.
4. SLOW INTERFACE MODULES:
   IA MODULE TYPE 7002090
   DLD MODULE TYPE 7002140
5. INPUT TO J6 (10Y__) IS FROM COMPUTER B.
6. INPUT TO J4 (00Y__) IS FROM COMPUTER A.
7. OUTPUTS FROM:
   J3 ARE TO COMPUTER A.
   J5 ARE TO COMPUTER B.
   J7 ARE TO THE PRINTER.

FIGURE 8-61

QTY REQD	FIND	REF DES	CODE IDENT	DWG SIZE	PART OR IDENTIFYING NO.	NOMENCLATURE OR DESCRIPTION

LIST OF MATERIAL

IDENT NO. 7030212-00

THIS DOCUMENT CONTAINS CONFIDENTIAL INFORMATION OF THE UNIVAC DIVISION OF SPERRY RAND CORPORATION AND IS FURNISHED PURSUANT TO THE FOLLOWING INSTRUMENT.

ON THE UNDERSTANDING THAT THIS DOCUMENT AND THE INFORMATION THEREON MAY NOT BE DEALT WITH IN ANY MANNER EXCEPT FOR THE PURPOSES OF THAT INSTRUMENT OR AS OTHERWISE PERMITTED IN WRITING BY THE UNIVAC DIVISION OF SPERRY RAND CORPORATION.

UNLESS OTHERWISE SPECIFIED
DIMENSION IN INCHES. TOLERANCE ON 2 PLACE DECIMALS ± | 3 PLACE DECIMALS ± | ANGLES ±
HOLE DIAMETER TOLERANCE: 0 THRU 250 +.003 −.002 | 251 THRU 500 +.005 −.003 | 501 & LARGER +.010 −.005
THREADS EXT CL 2A, INT CL 2B
MATERIAL
FINISH
NEXT ASSY | EQUIPMENT
APPLICATION
COMMODITY CODE

		DATE
LAYOUT		
DRAFTSMAN	J R CURTIS	3-965
CHECKER	B. POPOV	10/24/65
ENGINEER	R.D. MCCUMBER	10-28-65
APPROVAL		10-28-65

CLASS A

UNIVAC
DIVISION OF SPERRY RAND CORPORATION

TITLE
FUNCTIONAL SCHEMATIC, C REGISTER, BITS 24—27

CODE IDENT NO.	SIZE	DWG NO.
90536	D	7030212

SCALE | WEIGHT | SHEET 1 OF 1

REVISIONS						
SYM	ZONE	EIR	DESCRIPTION	CHK	DATE	APPROVED

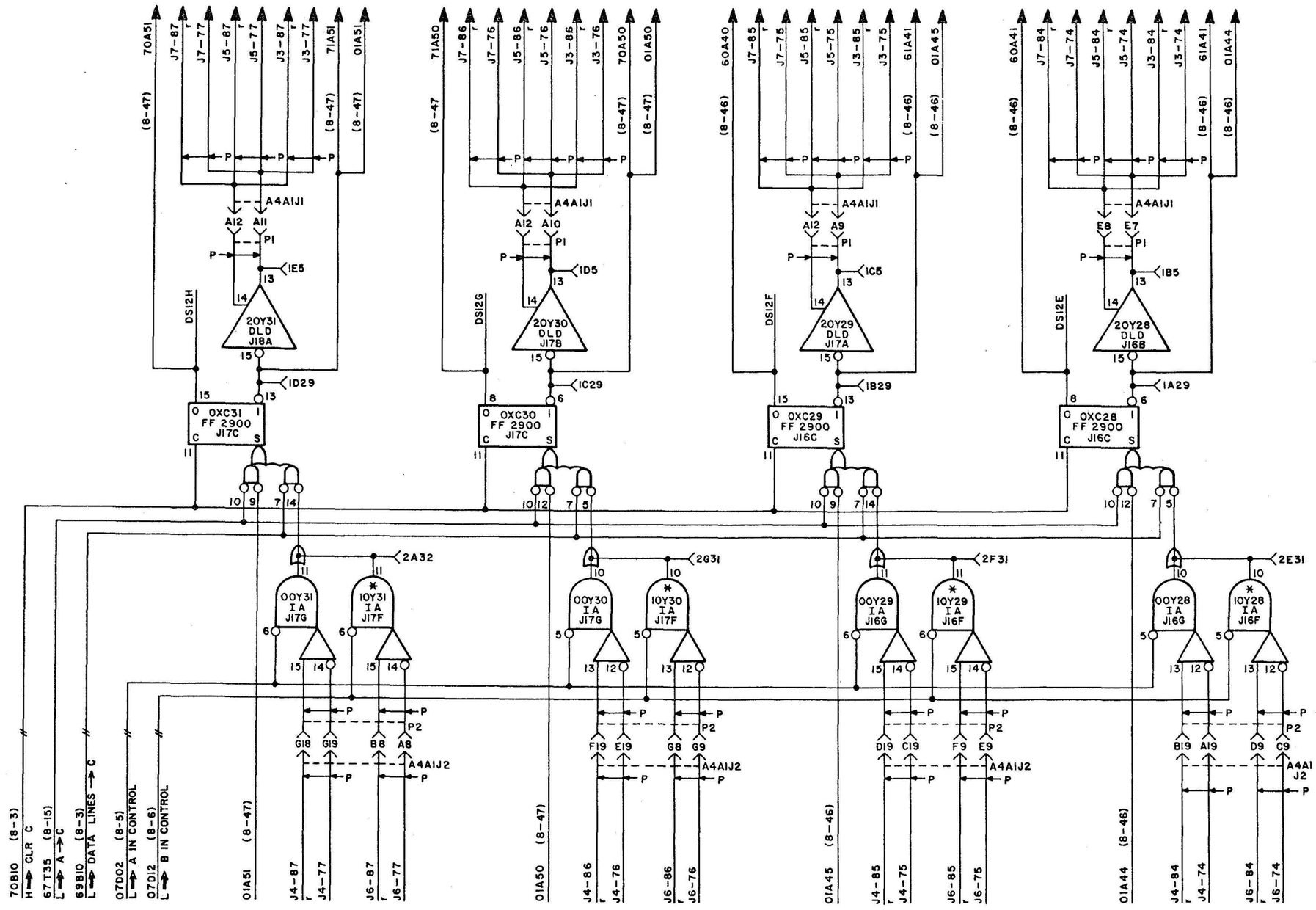

A12A1

NOTE:
1. * CIRCUIT INCLUDED FOR DUPLEX OPERATION ONLY.
2. FAST INTERFACE MODULES:
   IA MODULE TYPE 7002320
   DLD MODULE TYPE 7002340
3. FAST INTERFACE SHOWN.
4. SLOW INTERFACE MODULES:
   IA MODULE TYPE 7002090
   DLD MODULE TYPE 7002140
5. INPUT TO J6 (10Y__) IS FROM COMPUTER B.
6. INPUT TO J4 (00Y__) IS FROM COMPUTER A.
7. OUTPUTS FROM:
   J3 ARE TO COMPUTER A.
   J5 ARE TO COMPUTER B.
   J7 ARE TO THE PRINTER.

FIGURE 8-62

QTY REQD	FIND	REF DES	CODE IDENT	DWG SIZE	PART OR IDENTIFYING NO.	NOMENCLATURE OR DESCRIPTION

LIST OF MATERIAL

IDENT NO. 7030213-00

THIS DOCUMENT CONTAINS CONFIDENTIAL INFORMATION OF THE UNIVAC DIVISION OF SPERRY RAND CORPORATION AND IS FURNISHED PURSUANT TO THE FOLLOWING INSTRUMENT

ON THE UNDERSTANDING THAT THIS DOCUMENT AND THE INFORMATION THEREON MAY NOT BE DEALT WITH IN ANY MANNER EXCEPT FOR THE PURPOSES OF THAT INSTRUMENT OR AS OTHERWISE PERMITTED IN WRITING BY THE UNIVAC DIVISION OF SPERRY RAND CORPORATION

UNLESS OTHERWISE SPECIFIED
DIMENSION IN INCHES. TOLERANCE ON
2 PLACE DECIMALS ±
3 PLACE DECIMALS ±
ANGLES ±
HOLE DIAMETER TOLERANCE
0 THRU .250 +.003 −.002
.251 THRU .500 +.005 −.003
.501 & LARGER +.010 −.005
THREADS: EXT CL 2A, INT CL 2B
MATERIAL
NEXT ASSY
EQUIPMENT
APPLICATION
COMMODITY CODE
FINISH

		DATE
LAYOUT		
DRAFTSMAN	J R CURTIS	3-9-65
CHECKER	B.POPOV	3/18 BP 10/15/65
ENGINEER	R.D.MCCUMBER	R.A.M. 10-25-65
APPROVAL	R W Hendley	10-28-65

CLASS A

UNIVAC
DIVISION OF SPERRY RAND CORPORATION

TITLE
FUNCTIONAL SCHEMATIC, C REGISTER, BITS 28—31

CODE IDENT NO.	SIZE	DWG NO.
90536	D	7030213

SCALE
WEIGHT
SHEET 1 OF 1

REVISIONS						
SYM	ZONE	EIR	DESCRIPTION	CHK	DATE	APPROVED

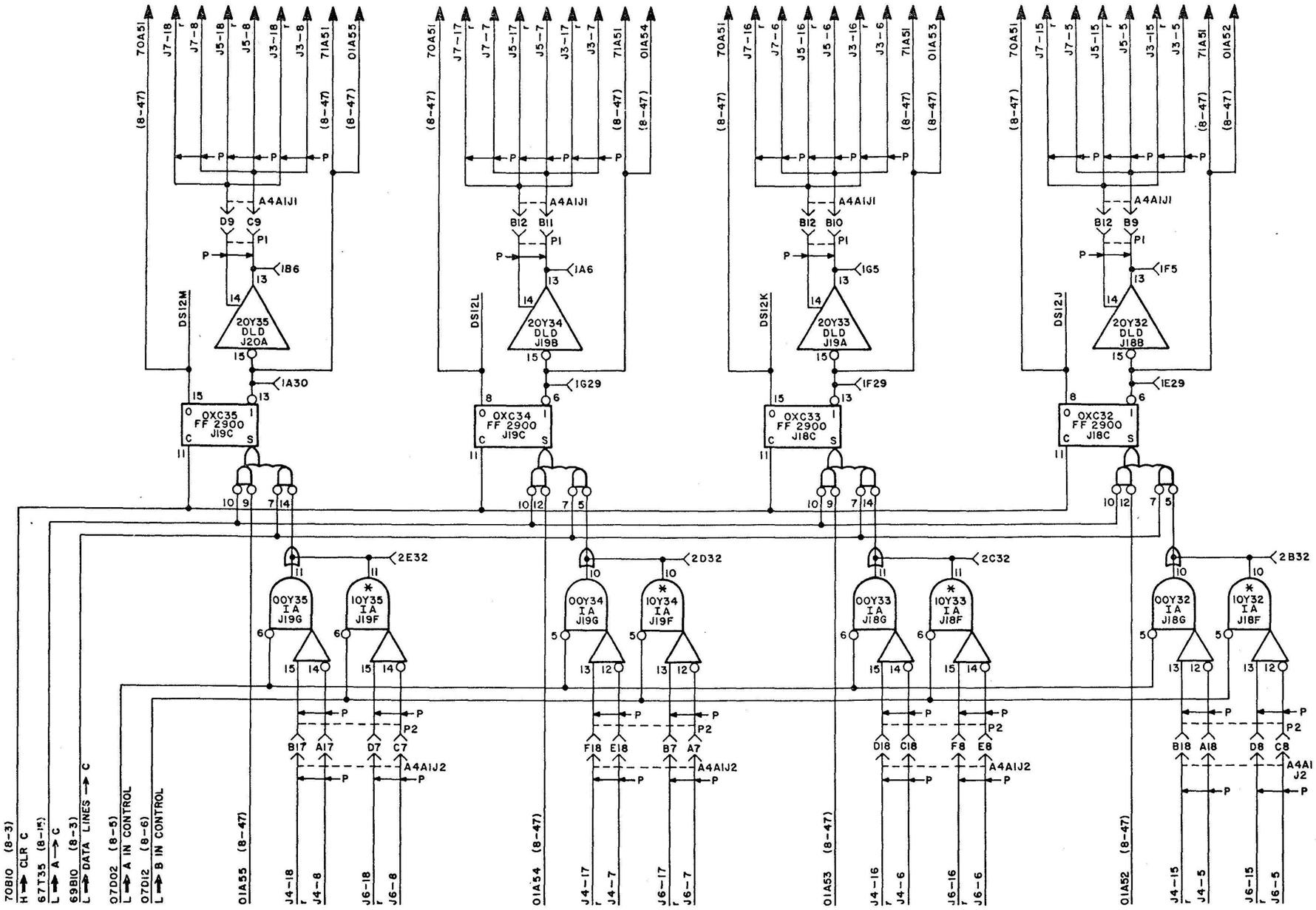

A12A1

NOTE:
1. * CIRCUIT INCLUDED FOR DUPLEX OPERATION ONLY.
2. FAST INTERFACE MODULES:
   IA MODULE TYPE 7002320
   DLD MODULE TYPE 7002340
3. FAST INTERFACE SHOWN.
4. SLOW INTERFACE MODULES:
   IA MODULE TYPE 7002090
   DLD MODULE TYPE 7002140
5. INPUT TO J6 (10Y__) IS FROM COMPUTER B.
6. INPUT TO J4 (00Y__) IS FROM COMPUTER A.
7. OUTPUTS FROM:
   J3 ARE TO COMPUTER A.
   J5 ARE TO COMPUTER B.
   J7 ARE TO THE PRINTER.

FIGURE 8-63

QTY REQD	FIND	REF DES	CODE IDENT	DWG SIZE	PART OR IDENTIFYING NO.	NOMENCLATURE OR DESCRIPTION

LIST OF MATERIAL

IDENT NO. 7030214-00

THIS DOCUMENT CONTAINS CONFIDENTIAL INFORMATION OF THE UNIVAC DIVISION OF SPERRY RAND CORPORATION AND IS FURNISHED PURSUANT TO THE FOLLOWING RESTRICTIVE AGREEMENT:

ON THE UNDERSTANDING THAT THIS DOCUMENT AND THE INFORMATION THEREON MAY NOT BE DEALT WITH IN ANY MANNER EXCEPT FOR THE PURPOSES OF THAT INSTRUMENT OR AS OTHERWISE PERMITTED IN WRITING BY THE UNIVAC DIVISION OF SPERRY RAND CORPORATION.

UNLESS OTHERWISE SPECIFIED
DIMENSION IN INCHES. TOLERANCE ON 2 PLACE DECIMALS ±, 3 PLACE DECIMALS ±, ANGLES ±
HOLE DIAMETER TOLERANCE: 0 THRU 250 +.003 −.002; 251 THRU 500 +.005 −.003; 501 & LARGER +.010 −.005
THREADS EXT CL 2A, INT CL 2B
MATERIAL
FINISH
NEXT ASSY | EQUIPMENT
APPLICATION
COMMODITY CODE

LAYOUT		DATE
DRAFTSMAN	J R CURTIS	3-10-65
CHECKER	B.POPOV	BP 10/26/65
ENGINEER	R.D.MCCUMBER	R.D.M 10-28-65
APPROVAL		10-28-65

CLASS A

UNIVAC
DIVISION OF SPERRY RAND CORPORATION

TITLE
FUNCTIONAL SCHEMATIC, C REGISTER, BITS 32—35

CODE IDENT NO. 90536 | SIZE D | DWG NO. 7030214

SCALE | WEIGHT | SHEET 1 OF 1

REVISIONS						
SYM	ZONE	EIR	DESCRIPTION	CHK	DATE	APPROVED

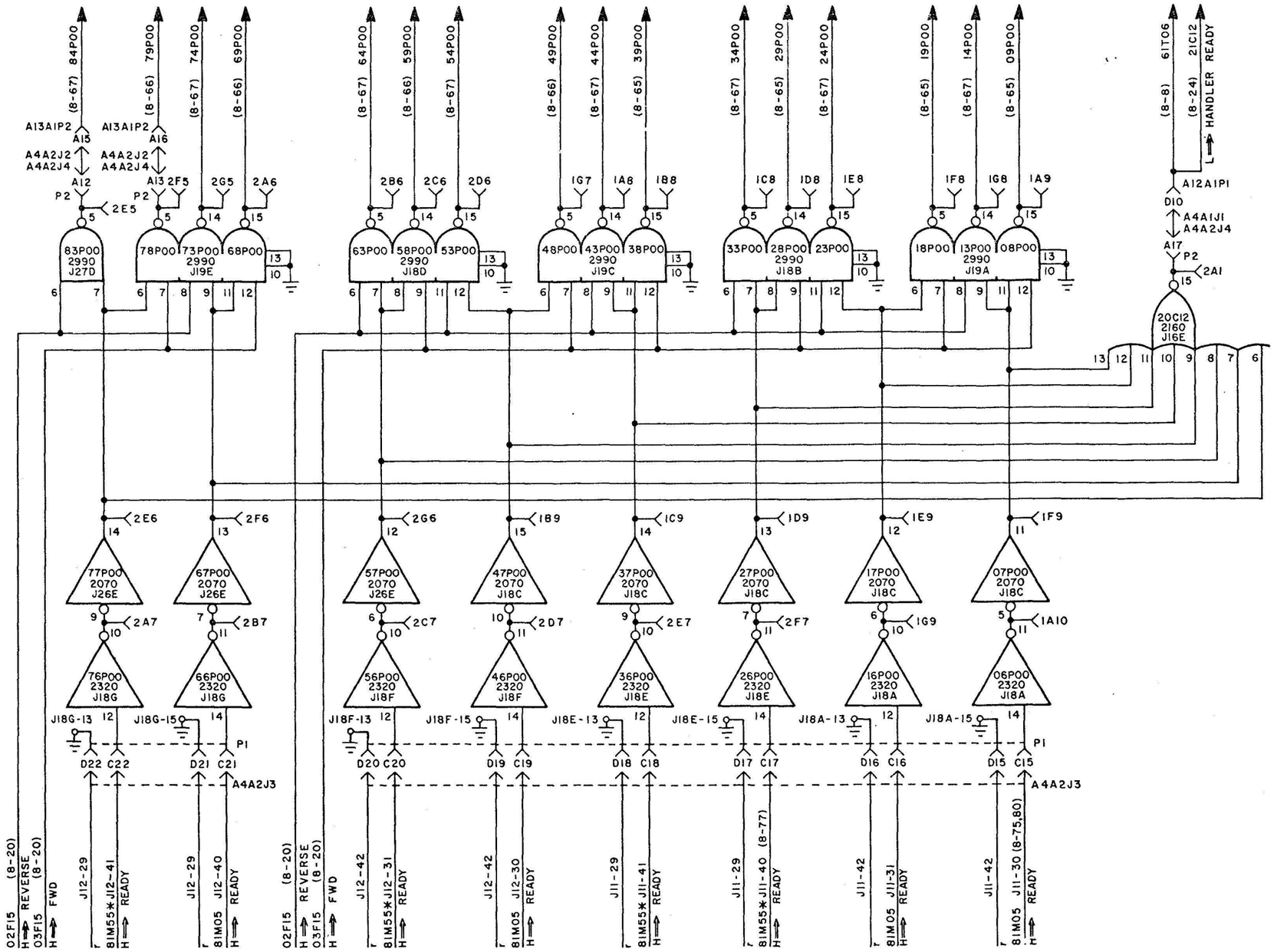

A13A2

NOTE:
1. * INPUT TERMS FOR 1540 MTU ARE SHOWN. INPUT TERMS FOR THE 1541 MTU ARE ALL 81M05.

FIGURE 8-64

QTY REQD	FIND	REF DES	CODE IDENT	DWG SIZE	PART OR IDENTIFYING NO.	NOMENCLATURE OR DESCRIPTION

LIST OF MATERIAL

IDENT NO. 7030264-00

THIS DOCUMENT CONTAINS CONFIDENTIAL INFORMATION OF THE UNIVAC DIVISION OF SPERRY RAND CORPORATION AND IS FURNISHED PURSUANT TO THE FOLLOWING INSTRUMENT:

ON THE UNDERSTANDING THAT THIS DOCUMENT AND THE INFORMATION THEREIN MAY NOT BE DEALT WITH IN ANY MANNER EXCEPT FOR THE PURPOSES OF THAT INSTRUMENT OR AS OTHERWISE PERMITTED IN WRITING BY THE UNIVAC DIVISION OF SPERRY RAND CORPORATION

UNLESS OTHERWISE SPECIFIED
DIMENSION IN INCHES. TOLERANCE ON
2 PLACE DECIMALS ± | 3 PLACE DECIMALS ± | ANGLES ±
HOLE DIAMETER TOLERANCE
0 THRU 250: +.003 −.002 | 251 THRU 300: +.005 −.003 | 301 & LARGER: +.010 −.005
THREADS: EXT CL 2A, INT CL 2B
MATERIAL
FINISH
NEXT ASSY | EQUIPMENT
APPLICATION
COMMODITY CODE

LAYOUT		DATE
DRAFTSMAN	J R CURTIS	5-20-65
CHECKER	B. POPOV	10/28/65
ENGINEER	R.D. MCCUMBER	10-28-65
APPROVAL		10-28-65

CLASS A

UNIVAC
DIVISION OF SPERRY RAND CORPORATION

TITLE
FUNCTIONAL SCHEMATIC,
TAPE HANDLER DELAY SELECTOR

CODE IDENT NO.	SIZE	DWG NO.
90536	D	7030264

SCALE | WEIGHT | SHEET 1 OF 1

REVISIONS						
SYM	ZONE	EIR	DESCRIPTION	CHK	DATE	APPROVED

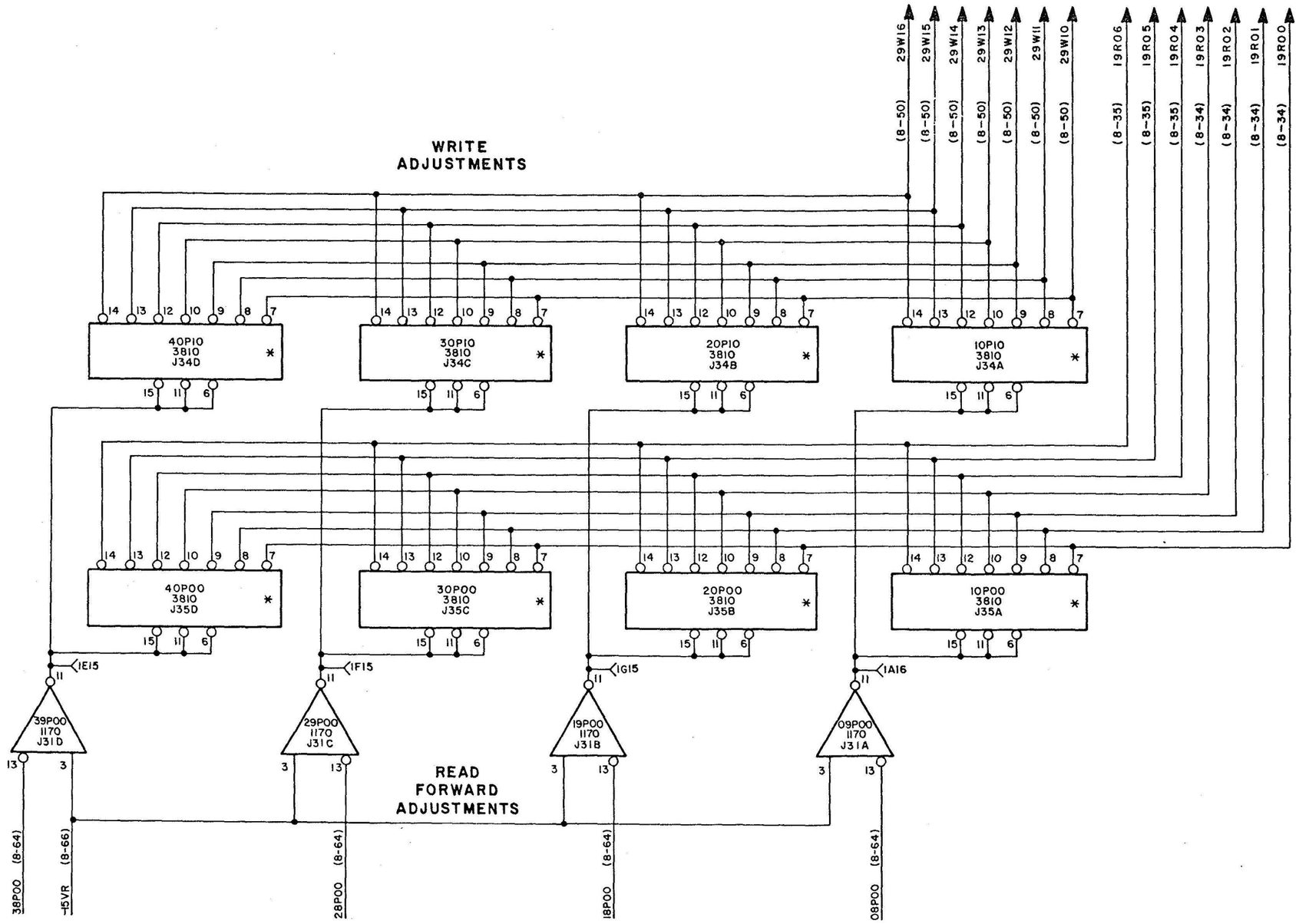

A13A2

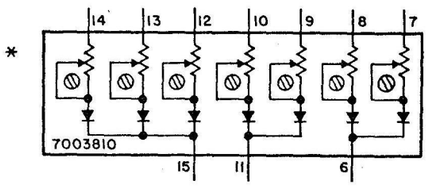

FIGURE 8-65

QTY REQD	FIND	REF DES	CODE IDENT	DWG SIZE	PART OR IDENTIFYING NO.	NOMENCLATURE OR DESCRIPTION

LIST OF MATERIAL

IDENT NO. 7030271-00

THIS DOCUMENT CONTAINS CONFIDENTIAL INFORMATION OF THE UNIVAC DIVISION OF SPERRY RAND CORPORATION AND IS FURNISHED PURSUANT TO THE FOLLOWING INSTRUMENT.

ON THE UNDERSTANDING THAT THIS DOCUMENT AND THE INFORMATION THEREIN WILL BE HELD STRICTLY IN CONFIDENCE AND USED IN THE PURCHASE OF THAT INSTRUMENT OR AS OTHERWISE PERMITTED IN WRITING BY THE UNIVAC DIVISION OF SPERRY RAND CORPORATION.

UNLESS OTHERWISE SPECIFIED
DIMENSION IN INCHES. TOLERANCE ON 2 PLACE DECIMALS ±, 3 PLACE DECIMALS ±, ANGLES ±
HOLE DIAMETER TOLERANCE: 0 THRU .250 +.003 −.002; .251 THRU .500 +.005 −.003; .501 & LARGER +.010 −.005
THREADS EXT CL 2A, INT CL 2B
MATERIAL
FINISH
NEXT ASSY | EQUIPMENT
APPLICATION
COMMODITY CODE

LAYOUT		DATE
DRAFTSMAN	J R CURTIS	3-4-65
CHECKER	B. POPOV	
ENGINEER	R.D. MCCUMBER	10-28-65
APPROVAL		10-28-65

CLASS A

UNIVAC
DIVISION OF SPERRY RAND CORPORATION

TITLE: FUNCTIONAL SCHEMATIC, DESKEWING ADJUSTMENTS PART 1

CODE IDENT NO.	SIZE	DWG NO.
90536	D	7030271

SCALE | WEIGHT | SHEET 1 OF 1

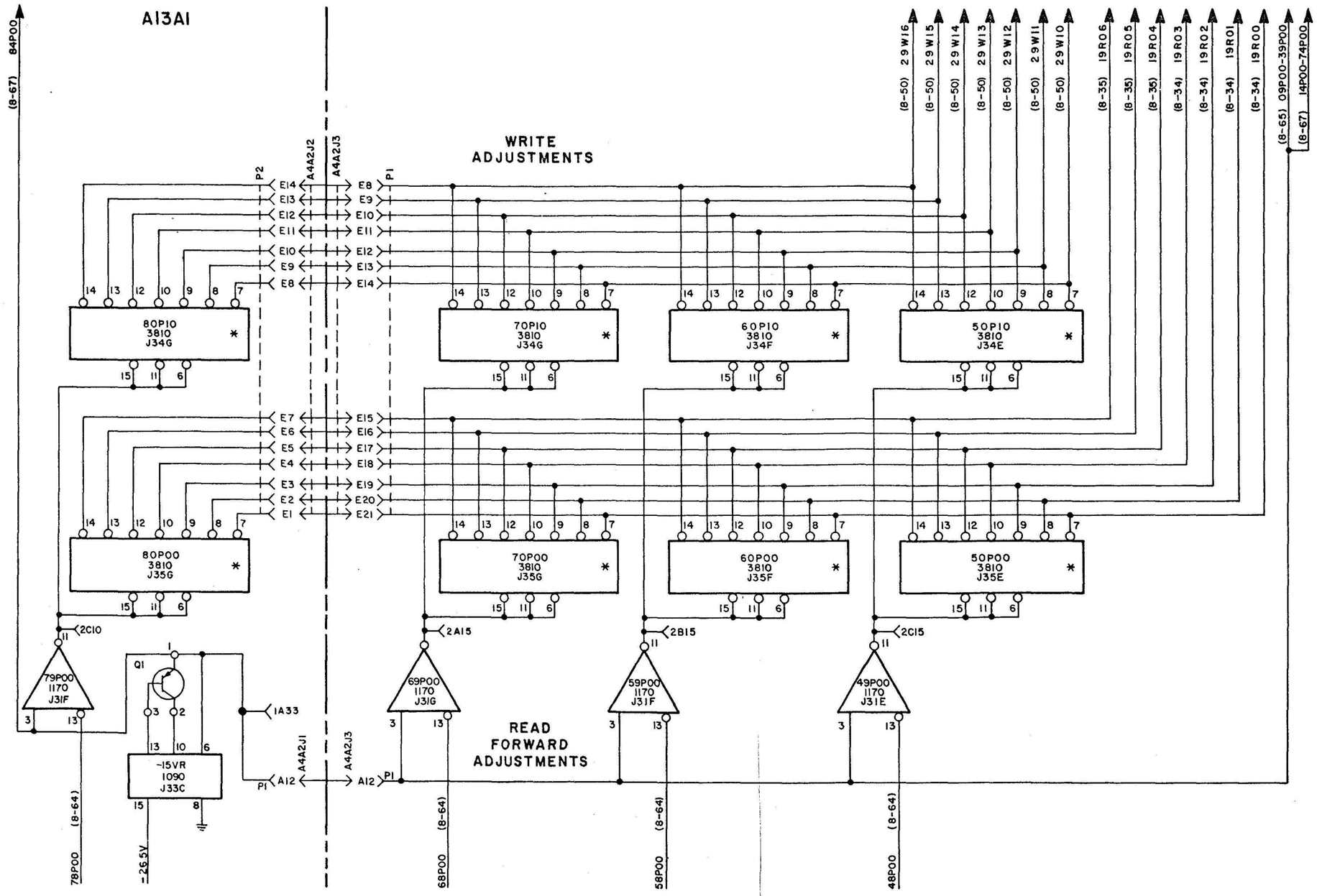

REPRODUCED FROM UNIVAC DWG NO 7030272 REV A

Figure 8-66. Deskewing Adjustments, Part 2, Functional Schematic

REVISIONS						
SYM	ZONE	EIR	DESCRIPTION	CHG	DATE	APPROVED

A13A1

READ
REVERSE
ADJUSTMENTS

P2 — A4A2J2 — A4A2J3 — P1

E21 E20 E19 E18 E17 E16 E15 — E1 E2 E3 E4 E5 E6 E7

19R06 (8-35) 19R05 (8-35) 19R04 (8-35) 19R03 (8-34) 19R02 (8-34) 19R01 (8-34) 19R00 (8-34)

85P00 3810 J33G *
75P00 3810 J33G *
65P00 3810 J33F *
55P00 3810 J33E *
45P00 3810 J33D *
35P00 3810 J33C *
25P00 3810 J33B *
15P00 3810 J33A *

2B10 — 84P00 1170 J31G — 83P00 -15VR (8-64) (8-66)

2D15 1B16 — 74P00 1170 J30G — 73P00 -15VR (8-64) (8-66)
44P00 1170 J30D — 43P00 (8-64)

2E15 1C16 — 64P00 1170 J30F — 63P00 (8-64)
34P00 1170 J30C — 33P00 (8-64)

2F15 1D16 — 54P00 1170 J30E — 53P00 (8-64)
24P00 1170 J30B — 23P00 (8-64)

1E16 — 14P00 1170 J30A — 13P00 (8-64)

A13A2

* 7003810

FIGURE 8-67

QTY REQD	FIND	REF DES	CODE IDENT	DWG SIZE	PART OR IDENTIFYING NO.	NOMENCLATURE OR DESCRIPTION

LIST OF MATERIAL

IDENT NO. 7030273-00

THIS DOCUMENT CONTAINS CONFIDENTIAL INFORMATION OF THE UNIVAC DIVISION OF SPERRY RAND CORPORATION AND IS FURNISHED PURSUANT TO THE FOLLOWING INSTRUMENT

ON THE UNDERSTANDING THAT THIS DOCUMENT AND THE INFORMATION THEREON MAY NOT BE DEALT WITH IN ANY MANNER EXCEPT FOR THE PURPOSES OF THAT INSTRUMENT OR AS OTHERWISE PERMITTED IN WRITING BY THE UNIVAC DIVISION OF SPERRY RAND CORPORATION

UNLESS OTHERWISE SPECIFIED
DIMENSION IN INCHES, TOLERANCE ON 2 PLACE DECIMALS ± .01, 3 PLACE DECIMALS ± .005, ANGLES ±
HOLE DIAMETER TOLERANCE: 0 THRU .250 +.003 −.002; .251 THRU .500 +.005 −.003; .501 & LARGER +.010 −.005
THREADS EXTERNAL INT CL 2B
MATERIAL
NEXT ASSY | EQUIPMENT
APPLICATION
COMMODITY CODE
FINISH

LAYOUT		DATE
DRAFTSMAN	J R CURTIS	3-4-65
CHECKER	B. POPOV	10-28-65
ENGINEER	R.D. MCCUMBER	10-28-65
APPROVAL		10-28-65

CLASS A

UNIVAC
DIVISION OF SPERRY RAND CORPORATION

TITLE
FUNCTIONAL SCHEMATIC,
DESKEWING ADJUSTMENT,
PART 3

CODE IDENT NO.	SIZE	DWG NO.
90536	D	7030273

SCALE — WEIGHT — SHEET 1 OF 1

REVISIONS						
SYM	ZONE	EIR	DESCRIPTION	DIR	DATE	APPROVED

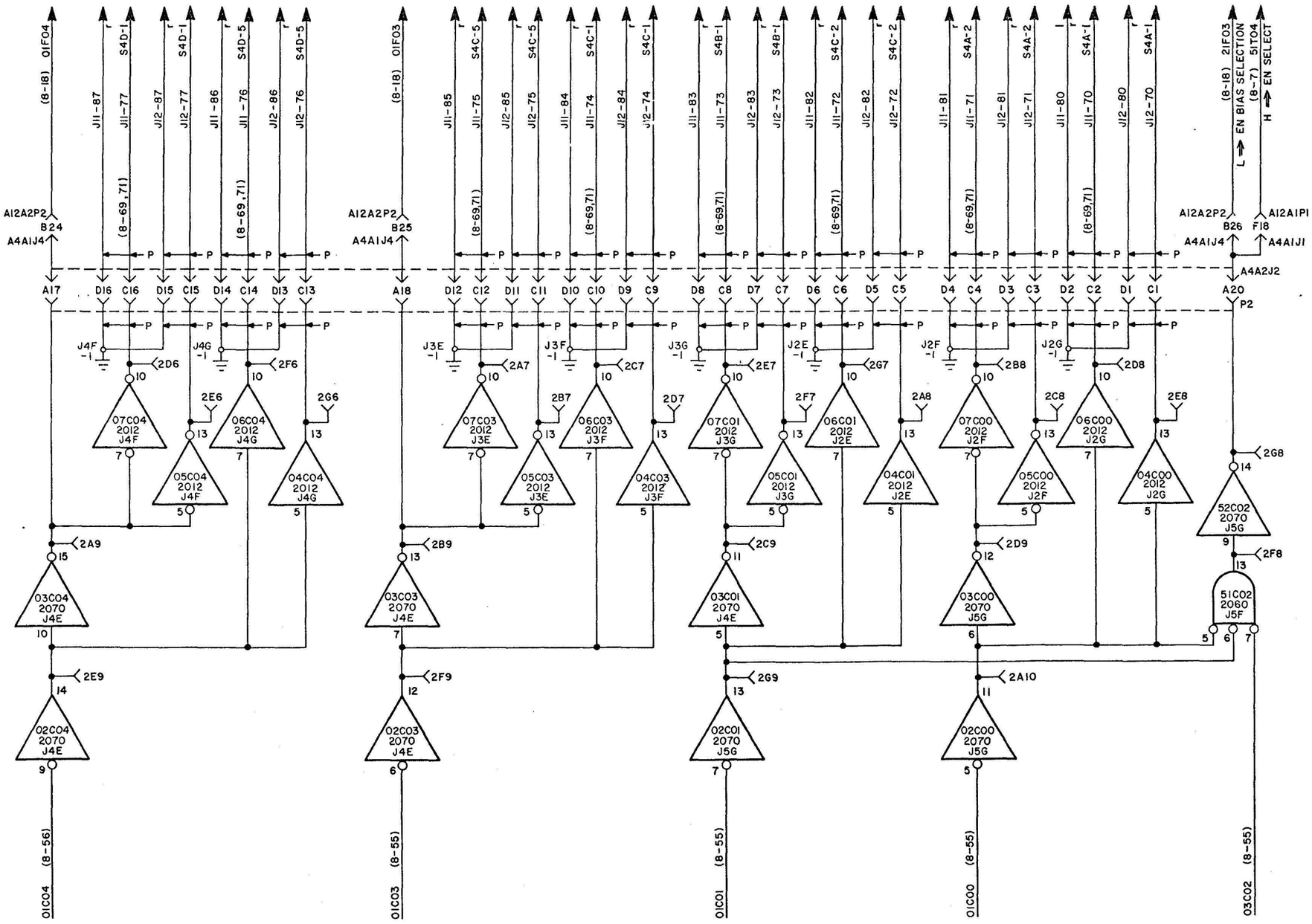

ADDRESS CODE					HANDLER ADDRESS
C4	C3	C2	C1	C0	
0	1	X	0	1	1
0	1	X	1	0	2
0	1	X	1	1	3
0	1	1	0	0	4
1	0	X	0	1	5
1	0	X	1	0	6
1	0	X	1	1	7
1	0	1	0	0	8
1	1	X	0	1	9
1	1	X	1	0	10
1	1	X	1	1	11
1	1	1	0	0	12
0	0	X	0	1	13
0	0	X	1	0	14
0	0	X	1	1	15
0	0	1	0	0	16

A13A1

NOTE:
1. JACK J12 CONNECTS BY JUMPER CABLE TO JACK J1 OF THE TAPE HANDLER LOCATED TO THE RIGHT OF MAGNETIC TAPE CONTROL (REFER TO INTERCONNECTION DIAGRAM FIGURE 2-9).
2. JACK J11 CONNECTS BY JUMPER CABLE TO JACK J1 OF THE TAPE HANDLER LOCATED TO THE LEFT OF MAGNETIC TAPE CONTROL (REFER TO INTERCONNECTION DIAGRAM FIGURE 2-9).

FIGURE 8-68

QTY REQD	FIND	REF DES	CODE IDENT	DWG SIZE	PART OR IDENTIFYING NO.	NOMENCLATURE OR DESCRIPTION

LIST OF MATERIAL

IDENT NO. 7030265-00

THIS DOCUMENT CONTAINS CONFIDENTIAL INFORMATION OF THE UNIVAC DIVISION OF SPERRY RAND CORPORATION AND IS FURNISHED PURSUANT TO THE FOLLOWING INSTRUMENT.

ON THE UNDERSTANDING THAT THIS DOCUMENT AND THE INFORMATION THEREON MAY NOT BE DEALT WITH IN ANY MANNER EXCEPT FOR THE PURPOSES OF THAT INSTRUMENT OR AS OTHERWISE PERMITTED IN WRITING BY THE UNIVAC DIVISION OF SPERRY RAND CORPORATION

UNLESS OTHERWISE SPECIFIED
DIMENSION IN INCHES. TOLERANCE ON 2 PLACE DECIMALS ±, 3 PLACE DECIMALS ±, ANGLES ±
HOLE DIAMETER TOLERANCE: 0 THRU .250 +.003 −.002; .251 THRU .500 +.005 −.003; .501 & LARGER +.010 −.005
THREADS: EXT CL 2A, INT CL 2B
MATERIAL
FINISH
NEXT ASSY | EQUIPMENT
APPLICATION
COMMODITY CODE

		DATE
LAYOUT		
DRAFTSMAN	R.R. PFUTZENREUTER	
CHECKER	B. POPOV	10-28-65
ENGINEER	R.D. MCCUMBER	10-28-65
APPROVAL		10-28-65

CLASS A

UNIVAC
DIVISION OF SPERRY RAND CORPORATION

TITLE
FUNCTIONAL SCHEMATIC, TAPE HANDLER ADDRESS AMPLIFIERS

CODE IDENT NO.	SIZE	DWG NO.
90536	D	7030265

SCALE | WEIGHT | SHEET 1 OF 1

REVISIONS						
SYM	ZONE	EIR	DESCRIPTION	CHK	DATE	APPROVED
A		100441	SEE EIR		8-21-67	

A1

J2-87 S4D-1 S7D-1 J2-86 J2-76 S4D-5 S7D-5 J2-84 J2-74 S4C-1 S7C-1 J2-85 J2-75 S4C-5 S7C-5 J2-83 J2-73 S4B-1 S7B-1 J2-82 J2-72 S4C-2 S7B-2 J2-80 J2-70 S4A-1 S7A-1 J2-81 J2-71 S4A-2 S7A-2

(8-70)

S4A

S4B

S4C

S4D

A4P13 J3 74 P J28A-1 84

A4P13 J3 75 P J28A-1 85

A4P13 J3 76 P J28A-1 86

A4P13 J3 77 P J29A-1 87

R29 180 1/4W -4.5V

R30 180 1/4W -4.5V

R31 180 1/4W -4.5V

R32 180 1/4W -4.5V

22M05 2220 J28A 10 11 12 13 15 IJ8

OIM05 L ⇒ SELECT (8-74)

A17

NOTE:

1. JACK J1 IS CONNECTED BY JUMPER CABLE TO JACK J12 OR JACK I1 OF MAGNETIC TAPE CONTROL OR TO JACK J2 OF ANOTHER TAPE HANDLER CABINET (REFER TO INTERCONNECTION DIAGRAM FIGURE 2-9).

2. JACK J2 CONNECTS BY JUMPER CABLE TO JACK J1 OF AN ADD ON UNIT (REFER TO INTERCONNECTION DIAGRAM FIGURE 2-9).

J1-87 07C04 J1-77 (8-68)
J1-86 06C04 J1-76 (8-68)
J1-84 06C03 J1-74 (8-68)
J1-85 07C03 J1-75 (8-68)
J1-83 07C01 J1-73 (8-68)
J1-82 06C01 J1-72 (8-68)
J1-80 06C00 J1-70 (8-68)
J1-81 07C00 J1-71 (8-68)

FIGURE 8-69

QTY REQD	FIND	REF DES	CODE IDENT	DWG SIZE	PART OR IDENTIFYING NO.	NOMENCLATURE OR DESCRIPTION

LIST OF MATERIAL

IDENT NO.7030282-00

THIS DOCUMENT CONTAINS CONFIDENTIAL INFORMATION OF THE UNIVAC DIVISION OF SPERRY RAND CORPORATION AND IS FURNISHED PURSUANT TO THE FOLLOWING INSTRUMENT:

ON THE UNDERSTANDING THAT THIS DOCUMENT AND THE INFORMATION THEREON MAY NOT BE DEALT WITH IN ANY MANNER EXCEPT FOR THE PURPOSES OF THAT INSTRUMENT OR AS OTHERWISE PERMITTED IN WRITING BY THE UNIVAC DIVISION OF SPERRY RAND CORPORATION.

UNLESS OTHERWISE SPECIFIED
DIMENSION IN INCHES. TOLERANCE ON 2 PLACE DECIMALS ± | 3 PLACE DECIMALS ± | ANGLES ±
HOLE DIAMETER TOLERANCE 0 THRU .250 +.003 −.002 | .251 THRU .500 +.005 −.003 | .501 & LARGER +.010 −.005
THREADS: EXT CL 2A, INT CL 2B
MATERIAL
FINISH
NEXT ASSY | EQUIPMENT
APPLICATION
COMMODITY CODE

		DATE
LAYOUT		
DRAFTSMAN	R.H PHERNETTON	6-3-65
CHECKER	B.POPOV	10-28-65
ENGINEER	R.D.MCCUMBER	10-28-65
APPROVAL		10-28-65

CLASS A

UNIVAC
DIVISION OF SPERRY RAND CORPORATION

TITLE
FUNCTIONAL SCHEMATIC, 1540 TAPE HANDLER I ADDRESS SWITCH

CODE IDENT NO.	SIZE	DWG NO.
90536	D	7030282

SCALE | WEIGHT | SHEET 1 OF 1

REVISIONS						
SYM	ZONE	EIR	DESCRIPTION	CHK	DATE	APPROVED
A		100441	SEE EIR		8-21-67	

A1

S7A

S7B

S7C

S7D

A4P13 J3 78 → J7A-1 (P)

A4P13 J3 79 → J7A-1 (P)

A4P13 J3 88 → J8A-1 (P)

A4P13 J3 89 → J8A-1 (P)

R33 180Ω 1/4W → -4.5V

R34 180Ω 1/4W → -4.5V

R35 180Ω 1/4W → -4.5V

R36 180Ω 1/4W → -4.5V

22M55 2220 J7A

01M55 SELECT L ⇒ (8-76)

07C00 VIA S4A (8-69)

06C00 VIA S4A (8-69)

06C01 VIA S4B (8-69)

07C01 VIA S4B (8-69)

07C03 VIA S4C (8-69)

06C03 VIA S4C (8-69)

07C04 VIA S4D (8-69)

06C04 VIA S4D (8-69)

A17

FIGURE 8-70

QTY REQD	FIND	REF DES	CODE IDENT	DWG SIZE	PART OR IDENTIFYING NO.	NOMENCLATURE OR DESCRIPTION

LIST OF MATERIAL

IDENT NO. 7030283-00

THIS DOCUMENT CONTAINS CONFIDENTIAL INFORMATION OF THE UNIVAC DIVISION OF SPERRY RAND CORPORATION AND IS FURNISHED PURSUANT TO THE FOLLOWING AGREEMENT

ON THE UNDERSTANDING THAT THIS DOCUMENT AND THE INFORMATION THEREIN CONTAINED SHALL BE DEALT WITH IN ANY MANNER AS IT IS WITHIN A REASONABLE LIMIT INTENDED FOR A CONFIDENCE ESTABLISHED AMONG BY THE UNIVAC DIVISION OF SPERRY RAND CORPORATION

UNLESS OTHERWISE SPECIFIED
DIMENSION IN INCHES TOLERANCE ON
2 PLACE DECIMALS ± 1 PLACE DECIMALS ± ANGLES
HOLE DIAMETER TOLERANCE
0 THRU 240 .003 .002 | 241 THRU 500 .005 .003 | 501 & LARGER .010 .005
THREADS FABRICATE INT CL 2B
MATERIAL
FINISH
NEXT ASSY | EQUIPMENT
APPLICATION
FOR MFG USE ONLY

		DATE
LAYOUT		
DRAFTSMAN	W.C. MEGGERS	6-3-5
CHECKER	B.POPOV	7/28 BP 10/28/67
ENGINEER	R.D. MCCUMBER	R.D.M. 10-30-67
APPROVAL		10-30-67

CLASS A

UNIVAC
DIVISION OF SPERRY RAND CORPORATION

TITLE
FUNCTIONAL SCHEMATIC
1540 TAPE HANDLER 2
ADDRESS SWITCH

CODE IDENT NO.	SIZE	DWG NO.
90536	D	7030283

SCALE | WEIGHT | SHEET | OF

REVISIONS						
SYM	ZONE	EIR	DESCRIPTION	CHK	DATE	APPROVED

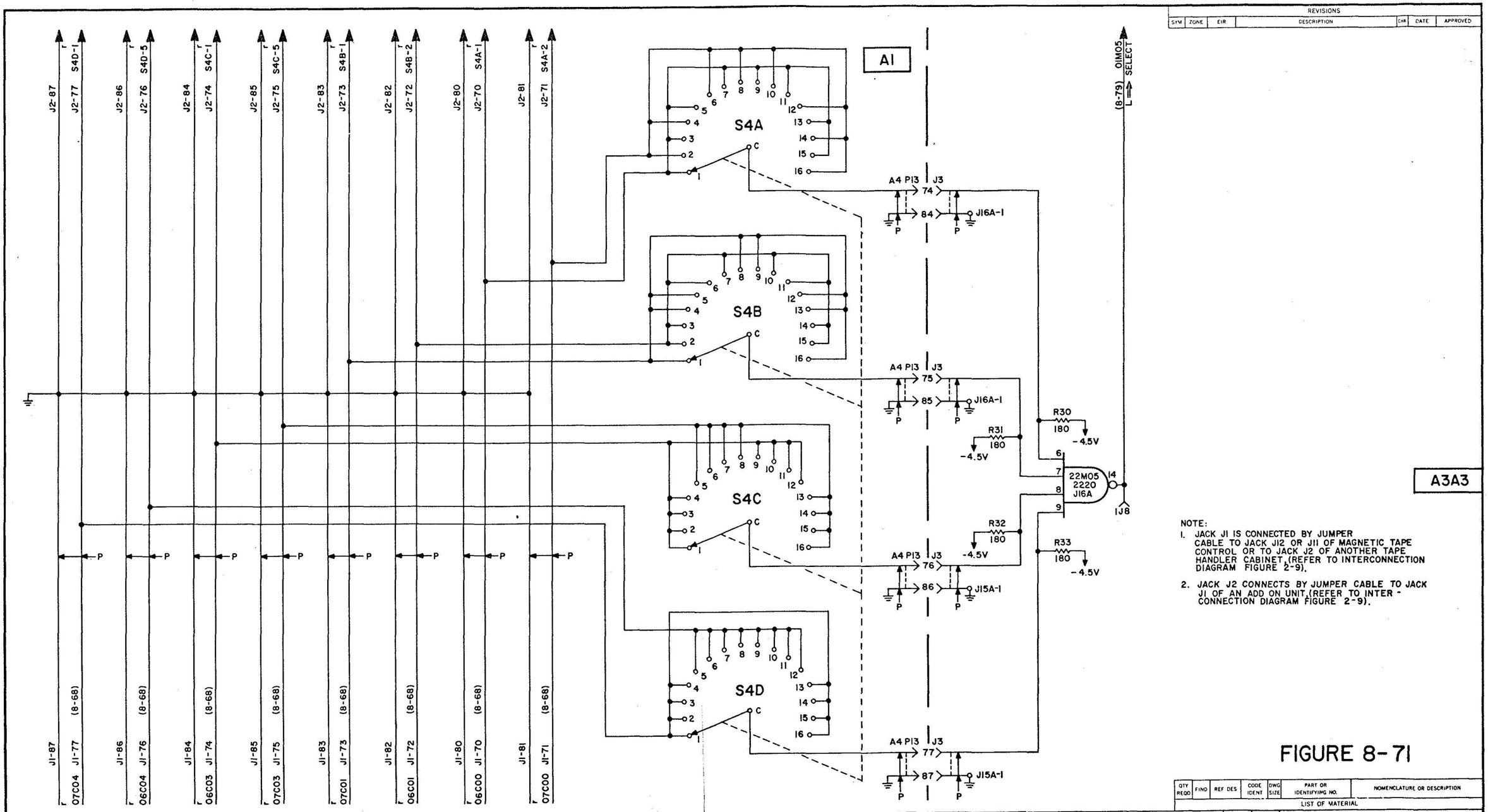

A3A3

NOTE:

1. JACK J1 IS CONNECTED BY JUMPER CABLE TO JACK J12 OR J11 OF MAGNETIC TAPE CONTROL OR TO JACK J2 OF ANOTHER TAPE HANDLER CABINET (REFER TO INTERCONNECTION DIAGRAM FIGURE 2-9).
2. JACK J2 CONNECTS BY JUMPER CABLE TO JACK J1 OF AN ADD ON UNIT (REFER TO INTER-CONNECTION DIAGRAM FIGURE 2-9).

FIGURE 8-71

QTY REQD	FIND	REF DES	CODE IDENT	DWG SIZE	PART OR IDENTIFYING NO.	NOMENCLATURE OR DESCRIPTION

LIST OF MATERIAL

IDENT NO. 7030215-00

THIS DOCUMENT CONTAINS CONFIDENTIAL INFORMATION OF THE UNIVAC DIVISION OF SPERRY RAND CORPORATION AND IS FURNISHED PURSUANT TO THE FOLLOWING INSTRUMENT

ON THE UNDERSTANDING THAT THIS DOCUMENT AND THE INFORMATION THEREIN MAY NOT BE DEALT WITH IN ANY MANNER EXCEPT FOR THE PURPOSES OF THAT INSTRUMENT OR AS OTHERWISE PERMITTED IN WRITING BY THE UNIVAC DIVISION OF SPERRY RAND CORPORATION

UNLESS OTHERWISE SPECIFIED
DIMENSION IN INCHES. TOLERANCE ON
2 PLACE DECIMALS ± | 3 PLACE DECIMALS ± | ANGLES ±
HOLE DIAMETER TOLERANCE
0 THRU .250 +.003 −.002 | .251 THRU .500 +.005 −.003 | 501 & LARGER +.010 −.005
THREADS EXT CL 2A, INT CL 2B
MATERIAL
NEXT ASSY | EQUIPMENT
APPLICATION
COMMODITY CODE
FINISH

LAYOUT		DATE
DRAFTSMAN	B.MILLER	6-3-65
CHECKER	B.POPOV	6/8 6/8
ENGINEER	R.D.MCCUMBER	10-28-65
APPROVAL		10-28-65

CLASS A

UNIVAC
DIVISION OF SPERRY RAND CORPORATION

TITLE
FUNCTIONAL SCHEMATIC
1541 TAPE HANDLER
ADDRESS SWITCH

CODE IDENT NO. 90536 | SIZE D | DWG NO. 7030215

SCALE | WEIGHT | SHEET 1 OF 1

REVISIONS						
SYM	ZONE	EIR	DESCRIPTION	CHK	DATE	APPROVED

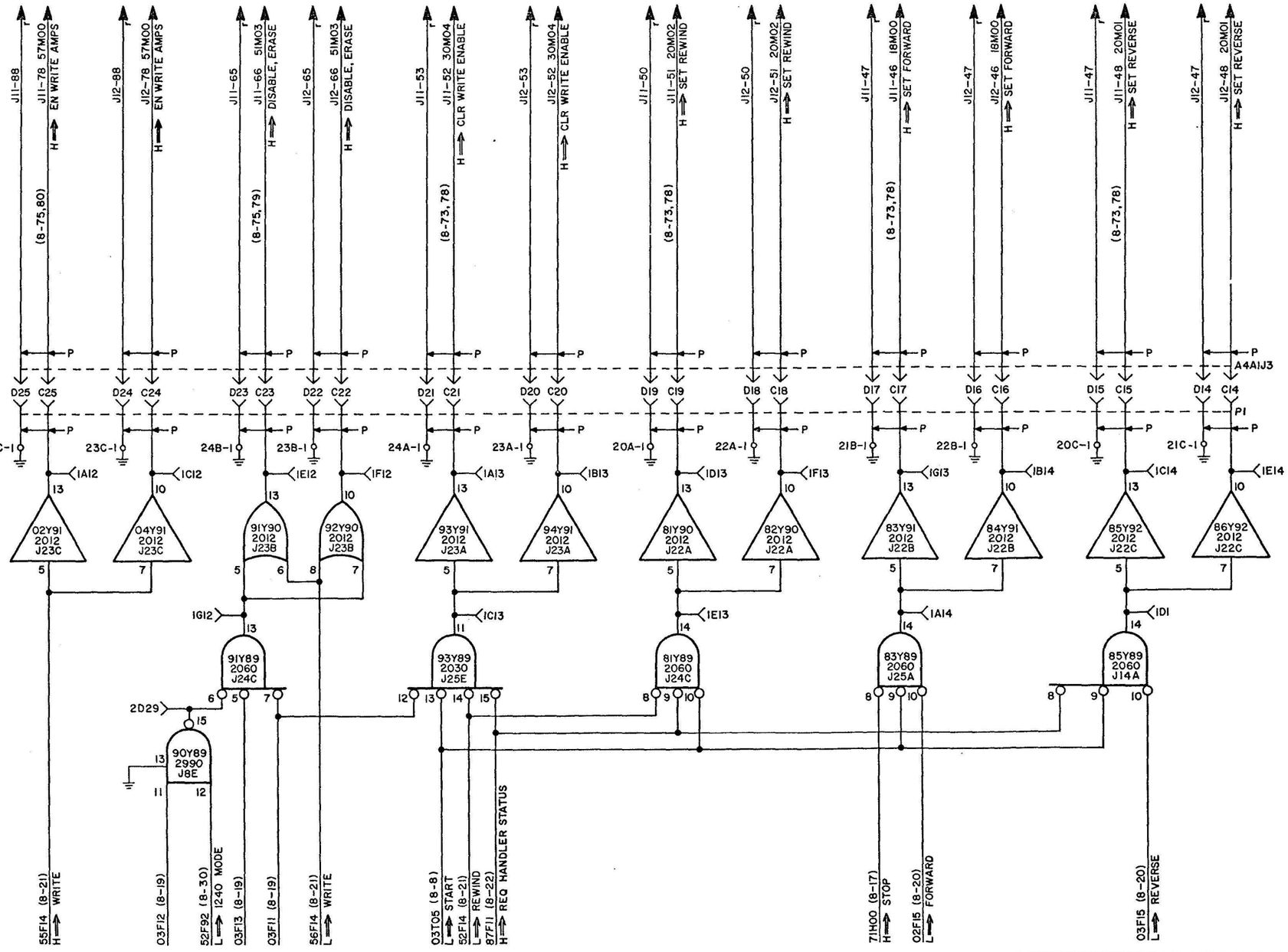

A12A2

FIGURE 8-72

QTY REQD	FIND	REF DES	CODE IDENT	DWG SIZE	PART OR IDENTIFYING NO.	NOMENCLATURE OR DESCRIPTION

LIST OF MATERIAL

IDENT NO. 7030266-00

THIS DOCUMENT CONTAINS CONFIDENTIAL INFORMATION OF THE UNIVAC DIVISION OF SPERRY RAND CORPORATION AND IS FURNISHED PURSUANT TO THE FOLLOWING INSTRUMENT:

ON THE UNDERSTANDING THAT THIS DOCUMENT AND THE INFORMATION THEREON, WILL NOT BE DEALT WITH IN ANY MANNER EXCEPT FOR THE PURPOSES OF THAT INSTRUMENT OR AS OTHERWISE PERMITTED IN WRITING BY THE UNIVAC DIVISION OF SPERRY RAND CORPORATION.

UNLESS OTHERWISE SPECIFIED
DIMENSION IN INCHES, TOLERANCE ON: 2 PLACE DECIMALS ±, 3 PLACE DECIMALS ±, ANGLES ±
HOLE DIAMETER TOLERANCE: 0 THRU .250 +.003 −.002; .251 THRU .500 +.005 −.003; .501 & LARGER +.010 −.005
THREADS: EXT CL 2A, INT CL 2B
MATERIAL
FINISH
NEXT ASSY | EQUIPMENT
APPLICATION
COMMODITY CODE

LAYOUT		DATE
DRAFTSMAN	D.R.MUHS	5-26-65
CHECKER	B. POPOV	10-28-65
ENGINEER	R.D.MCCUMBER	10-28-65
APPROVAL		10-28-65

CLASS A

UNIVAC
DIVISION OF SPERRY RAND CORPORATION

TITLE
FUNCTIONAL SCHEMATIC, FUNCTION AMPLIFIERS

CODE IDENT NO.	SIZE	DWG NO.
90536	D	7030266

SCALE | WEIGHT | SHEET 1 OF 1

REVISIONS						
SYM	ZONE	EIR	DESCRIPTION	CHK	DATE	APPROVED
A		69706	SEE EIR			
B		75659	SEE EIR			
C		91195	SEE EIR			

A17

NOTE:
1. JACK J1 IS CONNECTED BY JUMPER CABLE TO JACK J2 OF AN ADJACENT TAPE HANDLER OR TO JACK J11 OR J12 OF MAGNETIC TAPE CONTROL (REFER TO INTERCONNECTION DIAGRAM FIGURE 2-9).
2. JACK J2 IS CONNECTED BY JUMPER CABLE TO JACK J1 OF AN ADJACENT TAPE HANDLER, IF USED (REFER TO INTERCONNECTION DIAGRAM FIGURE 2-9).
3. PLUG A4P17 CONNECTS TO JACK J5 OF THE TAPE HANDLER 1 ELECTRONIC CHASSIS.

FIGURE 8-73

QTY REQD	FIND	REF DES	CODE IDENT	DWG SIZE	PART OR IDENTIFYING NO.	NOMENCLATURE OR DESCRIPTION

LIST OF MATERIAL

IDENT NO. 7030284-00

THIS DOCUMENT CONTAINS CONFIDENTIAL INFORMATION OF THE UNIVAC DIVISION OF SPERRY RAND CORPORATION AND IS FURNISHED PURSUANT TO THE FOLLOWING INSTRUMENT:

ON THE UNDERSTANDING THAT THIS DOCUMENT AND THE INFORMATION THEREIN, MAY NOT BE DEALT WITH IN ANY MANNER EXCEPT FOR THE PURPOSES OF THAT INSTRUMENT OR AS OTHERWISE PERMITTED IN WRITING BY THE UNIVAC DIVISION OF SPERRY RAND CORPORATION.

UNLESS OTHERWISE SPECIFIED
DIMENSION IN INCHES. TOLERANCE ON
2 PLACE DECIMALS ±
3 PLACE DECIMALS ±
ANGLES ±
HOLE DIAMETER TOLERANCE
0 THRU .230 +.003 −.002
.231 THRU .500 +.005 −.003
.501 & LARGER +.010 −.005
THREADS: EXT CL 2A, INT CL 2B
MATERIAL
FINISH
NEXT ASSY
EQUIPMENT
APPLICATION
COMMODITY CODE

		DATE
LAYOUT		
DRAFTSMAN	V. STEEBER	6-23-65
CHECKER	B. POPOV	10/28/65
ENGINEER	R.D. MCCUMBER	10-28-65
APPROVAL		10-28-65

UNIVAC
DIVISION OF SPERRY RAND CORPORATION

TITLE: FUNCTIONAL SCHEMATIC, 1540 LOCAL TAPE HANDLER, CONTROL 1 PART 1

CLASS	CODE IDENT NO.	SIZE	DWG NO.
A	90536	D	7030284

SCALE | WEIGHT | SHEET 1 OF 1

REVISIONS						
LTR	ZONE	EIR	DESCRIPTION	BY	DATE	APPROVED
A		69706	SEE EIR		1-1-66	A.W.B.
B		77505	SEE EIR		4/22/66	J.W.B.
C		90465	SEE EIR		9-7-67	R.L.C.
D		91195	SEE EIR		10-26-67	R.L.C.

A17

NOTE:
1. JACK J1 IS CONNECTED BY JUMPER CABLE TO JACK J2 OF AN ADJACENT TAPE HANDLER OR TO JACK J11 OR J12 OF MAGNETIC TAPE CONTROL (REFER TO INTERCONNECTION DIAGRAM FIGURE 2-9).
2. JACK J2 IS CONNECTED BY JUMPER CABLE TO JACK J1 OF AN ADJACENT TAPE HANDLER, IF USED (REFER TO INTERCONNECTION DIAGRAM FIGURE 2-9).
3. PLUG A4P17 CONNECTS TO JACK J5 OF THE TAPE HANDLER 1 ELECTRONIC CHASSIS.
4. THE FOLLOWING PIN DESIGNATORS WERE CHANGED FOR THE 1540 A.

FROM	TO
A4P17-AA	A4P17-F FWD
A4P17-DD	A4P17-C REV

FIGURE 8-74

QTY REQD	FIND	REF DES	CODE IDENT	DWG SIZE	PART OR IDENTIFYING NO.	NOMENCLATURE OR DESCRIPTION

LIST OF MATERIAL

IDENT NO. 7030285-00

THIS DOCUMENT CONTAINS CONFIDENTIAL INFORMATION OF THE UNIVAC DIVISION OF SPERRY RAND CORPORATION AND IS FURNISHED PURSUANT TO THE FOLLOWING INSTRUMENT

ON THE UNDERSTANDING THAT THIS DOCUMENT AND THE INFORMATION THEREIN WILL BE DEALT WITH IN ANY MANNER EXCEPT FOR THE PURPOSE OF THAT INSTRUMENT OR AS OTHERWISE PERMITTED IN WRITING BY THE UNIVAC DIVISION OF SPERRY RAND CORPORATION

UNLESS OTHERWISE SPECIFIED
DIMENSION IN INCHES, TOLERANCE ON
2 PLACE DECIMALS ± | 3 PLACE DECIMALS ± | ANGLES ±
HOLE DIAMETER TOLERANCE
0 THRU 250: +.003 −.002 | 251 THRU 500: +.005 −.003 | 501 & LARGER: +.010 −.005
THREADS EXTERNAL INT CL 2B
MATERIAL
NEXT ASSY | EQUIPMENT
APPLICATION
COMMODITY CODE
FINISH

		DATE
LAYOUT		
DRAFTSMAN	D.C. WHEELER	6-7-65
CHECKER	B. POPOV	10-28-65
ENGINEER	R.D. MCCUMBER	10-28-65
APPROVAL	R. Hinckley	10-28-65

CLASS A

UNIVAC
DIVISION OF SPERRY RAND CORPORATION

TITLE FUNCTIONAL SCHEMATIC, 1540 LOCAL TAPE HANDLER CONTROL 1, PART 2

CODE IDENT NO.	SIZE	DWG NO.
90536	D	7030285

SCALE | WEIGHT | SHEET 1 OF 1

REVISIONS						
SYM	ZONE	EIR	DESCRIPTION	BY	DATE	APPROVED
A		69706	SEE EIR	JWB	6-1-66	JWB
B		77505	SEE EIR	JWB	9/22/66	JWB
C		75711	SEE EIR	JWB	12-11-66	JWB
D		91195	SEE EIR	JWB	4-26-67	

A17

NOTE:
1. JACK J1 IS CONNECTED BY JUMPER CABLE TO JACK J2 OF AN ADJACENT TAPE HANDLER OR TO JACK J11 OR J12 OF MAGNETIC TAPE CONTROL (REFER TO INTER-CONNECTION DIAGRAM FIGURE 2-9).
2. JACK J2 IS CONNECTED BY JUMPER CABLE TO JACK J1 OF AN ADJACENT TAPE HANDLER, IF USED (REFER TO INTERCONNECTION DIAGRAM FIGURE 2-9).
3. PLUG A4P17 CONNECTS TO JACK J5 OF THE TAPE HANDLER 1 ELECTRONIC CHASSIS.

FIGURE 8-75

QTY REQD	FIND	REF DES	CODE IDENT	DWG SIZE	PART OR IDENTIFYING NO.	NOMENCLATURE OR DESCRIPTION

LIST OF MATERIAL

IDENT NO. 7030286-00

THIS DOCUMENT CONTAINS CONFIDENTIAL INFORMATION OF THE UNIVAC DIVISION OF SPERRY RAND CORPORATION AND IS FURNISHED PURSUANT TO THE FOLLOWING INSTRUMENT:

ON THE UNDERSTANDING THAT THIS DOCUMENT AND THE INFORMATION THEREON MAY NOT BE DEALT WITH IN ANY MANNER EXCEPT FOR THE PURPOSES OF THAT INSTRUMENT OR AS OTHERWISE PERMITTED IN WRITING BY THE UNIVAC DIVISION OF SPERRY RAND CORPORATION

UNLESS OTHERWISE SPECIFIED
DIMENSION IN INCHES. TOLERANCE ON
2 PLACE DECIMALS ± | 3 PLACE DECIMALS ± | ANGLES ±
HOLE DIAMETER TOLERANCE
0 THRU .250 +.003 −.002 | .251 THRU .500 +.005 −.003 | .501 & LARGER +.010 −.005
THREADS: EXT CL 2A, INT CL 2B
MATERIAL
FINISH
NEXT ASSY | EQUIPMENT
APPLICATION
COMMODITY CODE

		DATE
LAYOUT		
DRAFTSMAN	D. STATTS	6-9-65
CHECKER	B. POPOV	10/22/65
ENGINEER	R.D. MCCUMBER	10-28-65
APPROVAL		

UNIVAC
DIVISION OF SPERRY RAND CORPORATION

CLASS A

TITLE
FUNCTIONAL SCHEMATIC, 1540 LOCAL TAPE HANDLER CONTROL 1, PART 3

CODE IDENT NO.	SIZE	DWG NO.
90536	D	7030286

SCALE | WEIGHT | SHEET 1 OF 1

REVISIONS						
SYM	ZONE	EIR	DESCRIPTION	CHK	DATE	APPROVED
A		69706	SEE EIR			
B		90465	SEE EIR			
C		91195	SEE EIR			

A17

NOTE:
1. PLUG A4P18 CONNECTS TO JACK J5 OF THE TAPE HANDLER 2 ELECTRONICS CHASSIS.
2. THE FOLLOWING PIN DESIGNATORS WERE CHANGED FOR THE 1540 A.
   ADDED
   A4P18-W TO A4P14-82
   J2-87 TO J17B-01

FIGURE 8-76

QTY REQD	FIND	REF DES	CODE IDENT	DWG SIZE	PART OR IDENTIFYING NO.	NOMENCLATURE OR DESCRIPTION

LIST OF MATERIAL

IDENT NO. 7030287-00

THIS DOCUMENT CONTAINS CONFIDENTIAL INFORMATION OF THE UNIVAC DIVISION OF SPERRY RAND CORPORATION AND IS FURNISHED PURSUANT TO THE FOLLOWING INSTRUMENT.

ON THE UNDERSTANDING THAT THIS DOCUMENT AND THE INFORMATION THEREIN MAY NOT BE DEALT WITH IN ANY MANNER EXCEPT FOR THE PURPOSES OF THAT INSTRUMENT OR AS OTHERWISE PERMITTED IN WRITING BY THE UNIVAC DIVISION OF SPERRY RAND CORPORATION

UNLESS OTHERWISE SPECIFIED
DIMENSION IN INCHES. TOLERANCE ON 2 PLACE DECIMALS ±, 3 PLACE DECIMALS ±, ANGLES ±
HOLE DIAMETER TOLERANCE: 0 THRU .250 +.003 −.002; .251 THRU .500 +.005 −.003; .501 & LARGER +.010 −.005
THREADS EXT CL 2A, INT CL 2B
MATERIAL
FINISH
NEXT ASSY | EQUIPMENT
APPLICATION
COMMODITY CODE

		DATE
LAYOUT		
DRAFTSMAN	R. M. BECKMAN	6-3-65
CHECKER	B POPOV	10-12-65
ENGINEER	R.D.MCCUMBER	10-18-65
APPROVAL		10-25-65

CLASS A

UNIVAC
DIVISION OF SPERRY RAND CORPORATION

TITLE
FUNCTIONAL SCHEMATIC,
1540 LOCAL TAPE HANDLER
CONTROL 2, PART 1

CODE IDENT NO.	SIZE	DWG NO.
90536	D	7030287

SCALE | WEIGHT | SHEET 1 OF 1

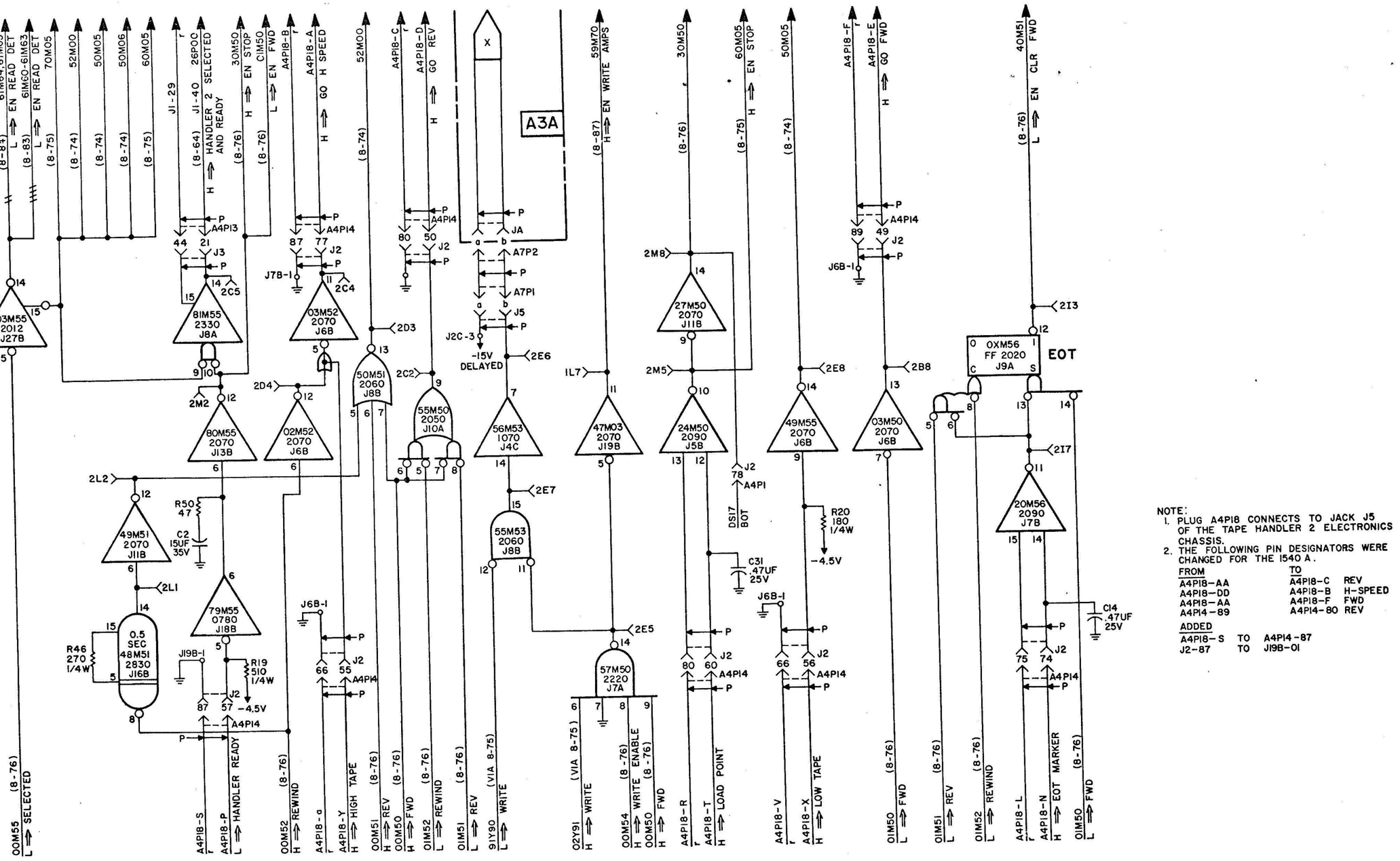

NOTE:
1. PLUG A4P18 CONNECTS TO JACK J5 OF THE TAPE HANDLER 2 ELECTRONICS CHASSIS.
2. THE FOLLOWING PIN DESIGNATORS WERE CHANGED FOR THE 1540 A.

FROM	TO	
A4P18-AA	A4P18-C	REV
A4P18-DD	A4P18-B	H-SPEED
A4P18-AA	A4P18-F	FWD
A4P14-89	A4P14-80	REV

ADDED

A4P18-S	TO	A4P14-87
J2-87	TO	J19B-01

REPRODUCED FROM UNIVAC DWG NO 7030288 REV E

Figure 8-77. 1540 Local Tape Handler Control 2, Part 2, Functional Schematic

REVISIONS						
SYM	ZONE	EIR	DESCRIPTION	CHK	DATE	APPROVED
A		69704	SEE EIR	RP	8-11-66	J.W.B.
B		75655	SEE EIR	RP	5-11-66	

A3A3

NOTE:
1. JACK J1 IS CONNECTED BY JUMPER CABLE TO JACK J2 OF AN ADJACENT TAPE HANDLER OR TO JACK J11 OR J12 OF MAGNETIC TAPE CONTROL (REFER TO INTER-CONNECTION DIAGRAM FIGURE 2-9).
2. JACK J2 IS CONNECTED BY JUMPER CABLE TO JACK J1 OF AN ADJACENT TAPE HANDLER, IF USED (REFER TO INTERCONNECTION DIAGRAM FIGURE 2-9).
3. PLUG A4P17 CONNECTS TO JACK J5 OF THE TAPE HANDLER ELECTRONIC CHASSIS.

FIGURE 8-78

QTY REQD	FIND	REF DES	CODE IDENT	DWG SIZE	PART OR IDENTIFYING NO.	NOMENCLATURE OR DESCRIPTION

LIST OF MATERIAL

IDENT NO. 7030289-00

THIS DOCUMENT CONTAINS CONFIDENTIAL INFORMATION OF THE UNIVAC DIVISION OF SPERRY RAND CORPORATION AND IS FURNISHED PURSUANT TO THE FOLLOWING INSTRUMENT.

ON THE UNDERSTANDING THAT THIS DOCUMENT AND THE INFORMATION THEREIN MAY NOT BE DEALT WITH IN ANY MANNER EXCEPT FOR THE PURPOSES OF THAT INSTRUMENT OR AS OTHERWISE PERMITTED IN WRITING BY THE UNIVAC DIVISION OF SPERRY RAND CORPORATION

UNLESS OTHERWISE SPECIFIED
DIMENSION IN INCHES. TOLERANCE ON 2 PLACE DECIMALS ±, 3 PLACE DECIMALS ±, ANGLES ±
HOLE DIAMETER TOLERANCE: 0 THRU .250 +.003 −.002; .251 THRU .500 +.005 −.003; .501 & LARGER +.010 −.005
THREADS: EXT CL 2A, INT CL 2B
MATERIAL
FINISH
NEXT ASSY
EQUIPMENT
APPLICATION
COMMODITY CODE

LAYOUT		DATE
DRAFTSMAN	R.R. PFUTZENREUTER	6-7-65
CHECKER	B. POPOV	10-28-65
ENGINEER	R.D. MCCUMBER	10-28-65
APPROVAL		10-28-65

CLASS A

UNIVAC
DIVISION OF SPERRY RAND CORPORATION

TITLE
FUNCTIONAL SCHEMATIC, 1541 LOCAL TAPE HANDLER CONTROL, PART I

CODE IDENT NO.	SIZE	DWG NO.
90536	D	7030289

SCALE | WEIGHT | SHEET 1 OF 1

REVISIONS					
LTR	ZONE	EIR	DESCRIPTION	DATE	APPROVED
A		69721	SEE EIR	4-11-66	J. W. B.
B		75655	SEE EIR	9-15-66	J. W. B.
C		77158	SEE EIR	11-18-67	[illegible]

A3A3

NOTE:
1. JACK J1 IS CONNECTED BY JUMPER CABLE TO JACK J2 OF AN ADJACENT TAPE HANDLER OR TO JACK J11 OR J12 OF MAGNETIC TAPE CONTROL (REFER TO INTERCONNECTION DIAGRAM FIGURE 2-9).
2. JACK J2 IS CONNECTED BY JUMPER CABLE TO JACK J1 OF AN ADJACENT TAPE HANDLER, IF USED (REFER TO INTERCONNECTION DIAGRAM FIGURE 2-9)
3. PLUG A4P17 CONNECTS TO JACK J5 OF THE TAPE HANDLER ELECTRONIC CHASSIS.

FIGURE 8-79

QTY REQD	FIND	REF DES	CODE IDENT	DWG SIZE	PART OR IDENTIFYING NO.	NOMENCLATURE OR DESCRIPTION

LIST OF MATERIAL

IDENT NO. 7030290-00

THIS DOCUMENT CONTAINS CONFIDENTIAL INFORMATION OF THE UNIVAC DIVISION OF SPERRY RAND CORPORATION AND IS FURNISHED PURSUANT TO THE FOLLOWING INSTRUMENT

ON THE UNDERSTANDING THAT THIS DOCUMENT AND THE INFORMATION THEREON MAY NOT BE DEALT WITH IN ANY MANNER EXCEPT FOR THE PURPOSE OF WHICH IT IS FURNISHED OR AS OTHERWISE PERMITTED IN WRITING BY THE UNIVAC DIVISION OF SPERRY RAND CORPORATION

UNLESS OTHERWISE SPECIFIED
DIMENSION IN INCHES TOLERANCE ON
2 PLACE DECIMALS ± | 3 PLACE DECIMALS ± | ANGLES ±
HOLE DIAMETER TOLERANCE
0 THRU .230 +.003 −.002 | .231 THRU .500 +.005 −.003 | .501 & LARGER +.010 −.005
THREADS: EXT CL 2A, INT CL 2B
MATERIAL
FINISH
NEXT ASSY | EQUIPMENT
APPLICATION
COMMODITY CODE

LAYOUT		DATE
DRAFTSMAN	D. STATTS	6-9-65
CHECKER	B. POPOV	10/28/65
ENGINEER	R.D. MCCUMBER	11-28-65
APPROVAL	[signature]	10-25-65

CLASS A

UNIVAC
DIVISION OF SPERRY RAND CORPORATION

TITLE
FUNCTIONAL SCHEMATIC, 1541 LOCAL TAPE HANDLER CONTROL, PART 2

CODE IDENT NO.	SIZE	DWG NO.
90536	D	7030290

SCALE | WEIGHT | SHEET 1 OF 1

REVISIONS				
LTR	ECR	DESCRIPTION	BY	APPROVED
A	77158	SEE EIR	11-11-67	

A3A3

NOTE:
1. JACK J1 IS CONNECTED BY JUMPER CABLE TO JACK J2 OF AN ADJACENT TAPE HANDLER OR TO JACK J11 OR J12 OF MAGNETIC TAPE CONTROL (REFER TO INTERCONNECTION DIAGRAM FIGURE 2-9).
2. JACK J2 IS CONNECTED BY JUMPER CABLE TO JACK J1 OF AN ADJACENT TAPE HANDLER, IF USED (REFER TO INTERCONNECTION DIAGRAM FIGURE 2-9).
3. PLUG A4P17 CONNECTS TO JACK J5 OF THE TAPE HANDLER ELECTRONIC CHASSIS.
4. * THE FOLLOWING SHOWS ERASE HEAD CONNECTIONS USED WITH AMPEX HANDLER ONLY.

J4C-3 (J1a) — -15V DELAYED 56M03 — (J1b)

FIGURE 8-80

QTY REQD	FIND	REF DES	CODE IDENT	DWG SIZE	PART OR IDENTIFYING NO.	NOMENCLATURE OR DESCRIPTION

LIST OF MATERIAL

IDENT NO. 7030291-00

THIS DOCUMENT CONTAINS CONFIDENTIAL INFORMATION OF THE UNIVAC DIVISION OF SPERRY RAND CORPORATION AND IS FURNISHED PURSUANT TO THE FOLLOWING INSTRUMENT:

ON THE UNDERSTANDING THAT THIS DOCUMENT AND THE INFORMATION CONTAINED THEREIN MAY NOT BE DEALT WITH IN ANY MANNER NOT AUTHORIZED BY THE PURPOSES OF THAT INSTRUMENT OR REPRODUCED, DISCLOSED OR USED IN WHOLE OR IN PART WITHOUT THE WRITTEN PERMISSION IN EACH INSTANCE OF THE UNIVAC DIVISION OF SPERRY RAND CORPORATION

UNLESS OTHERWISE SPECIFIED
DIMENSION IN INCHES TOLERANCE ON 2 PLACE DECIMALS ± .01 | 3 PLACE DECIMALS ± .005 | ANGLES ±
HOLE DIAMETER TOLERANCE
0 THRU 250 +.003 −.002 | 251 THRU 500 +.005 −.003 | 501 & LARGER +.010 −.005
THREADS EXT CL 2A, INT CL 2B
MATERIAL
FINISH
NEXT ASSY | EQUIPMENT
APPLICATION
COMMODITY CODE

LAYOUT		DATE
DRAFTSMAN	R.R PFUTZENREUTER	6-9-65
CHECKER	B. POPOV	VOB 10/23/67
ENGINEER	R.D.MCCUMBER	10-20-67
APPROVAL		10-25-67

UNIVAC
DIVISION OF SPERRY RAND CORPORATION

TITLE
FUNCTIONAL SCHEMATIC, 1541 LOCAL TAPE HANDLER CONTROL, PART 3

CLASS	CODE IDENT NO.	SIZE	DWG NO.
D	90536	D	7030291

SCALE | WEIGHT | SHEET 1 OF 1

REVISIONS						
SYM	ZONE	EIR	DESCRIPTION	CHK	DATE	APPROVED
A		59704	SEE EIR	[illegible]	8-11-66	R.W.B.
B		75659	SEE EIR	[illegible]	5-2-66	R.W.B.

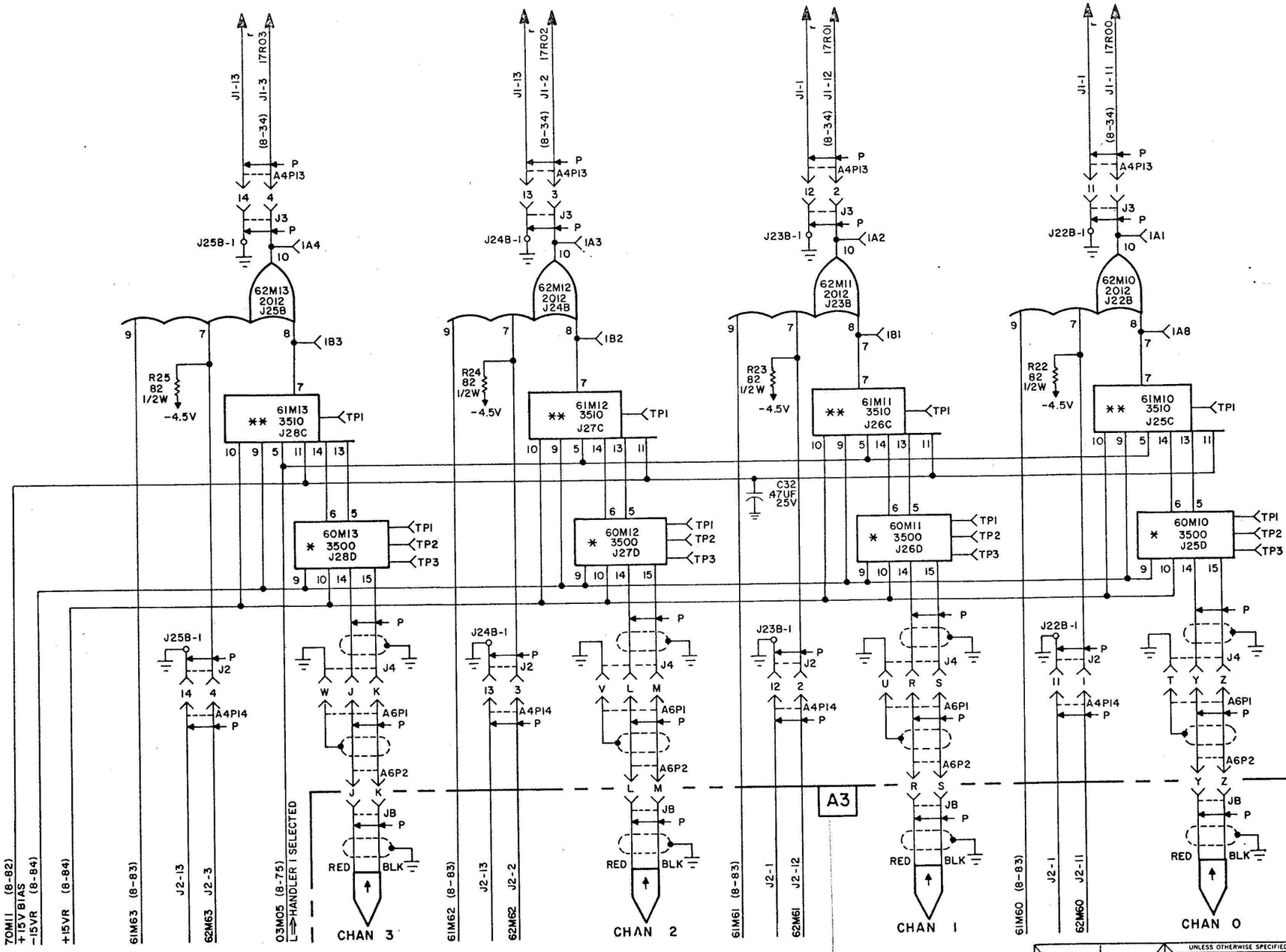

NOTES:

1. INPUTS TO JACK J2 ARE (VIA JUMPER CABLE) FROM AN ADJACENT TAPE HANDLER. (REFER TO INTERCONNECTION DIAGRAM FIGURE 2-9).
2. JACK J1 IS CONNECTED BY JUMPER CABLE TO J2 OF AN ADJACENT TAPE HANDLER OR TO J11 OR J12 OF MAGNETIC TAPE CONTROL. (REFER TO INTERCONNECTION DIAGRAM FIGURE 2-9).
3. * READ AMPLIFIER MODULE.

TPI OR TP2 READING "1"S, TP3 = GRD: +4.5V, 0V, -4.5V

4. ** READ DETECTOR MODULE.

TPI READING "1"S: APPROX +4.5V, 0V, APPROX -4.5V

A17

FIGURE 8-81

QTY REQD	FIND	REF DES	CODE IDENT	DWG SIZE	PART OR IDENTIFYING NO.	NOMENCLATURE OR DESCRIPTION

LIST OF MATERIAL

IDENT NO. 7030278-00

THIS DOCUMENT CONTAINS CONFIDENTIAL INFORMATION OF THE UNIVAC DIVISION OF SPERRY RAND CORPORATION AND IS FURNISHED PURSUANT TO THE FOLLOWING INSTRUMENT.

ON THE UNDERSTANDING THAT THIS DOCUMENT AND THE INFORMATION THEREON MAY NOT BE DEALT WITH IN ANY MANNER EXCEPT FOR THE PURPOSES OF THAT INSTRUMENT OR AS OTHERWISE PERMITTED IN WRITING BY THE UNIVAC DIVISION OF SPERRY RAND CORPORATION

UNLESS OTHERWISE SPECIFIED
DIMENSION IN INCHES. TOLERANCE ON
2 PLACE DECIMALS ±
3 PLACE DECIMALS ±
ANGLES ±
HOLE DIAMETER TOLERANCE
0 THRU .250 +.003 −.002
.251 THRU .500 +.005 −.003
.501 & LARGER +.010 −.005
THREADS: EXT CL 2A, INT CL 2B
MATERIAL
FINISH
NEXT ASSY
EQUIPMENT
APPLICATION
COMMODITY CODE

LAYOUT		DATE
DRAFTSMAN	R.M. BECKMAN	6-2-65
CHECKER	B.POPOV	10/28/65
ENGINEER	R.D. MCCUMBER	10-28-65
APPROVAL		10-28-65

CLASS A

UNIVAC
DIVISION OF SPERRY RAND CORPORATION

TITLE
FUNCTIONAL SCHEMATIC, 1540 TAPE HANDLER 1 READ AMPLIFIERS AND DETECTORS, BITS 0-3

CODE IDENT NO.	SIZE	DWG NO.
90536	D	7030278

SCALE | WEIGHT | SHEET 1 OF 1

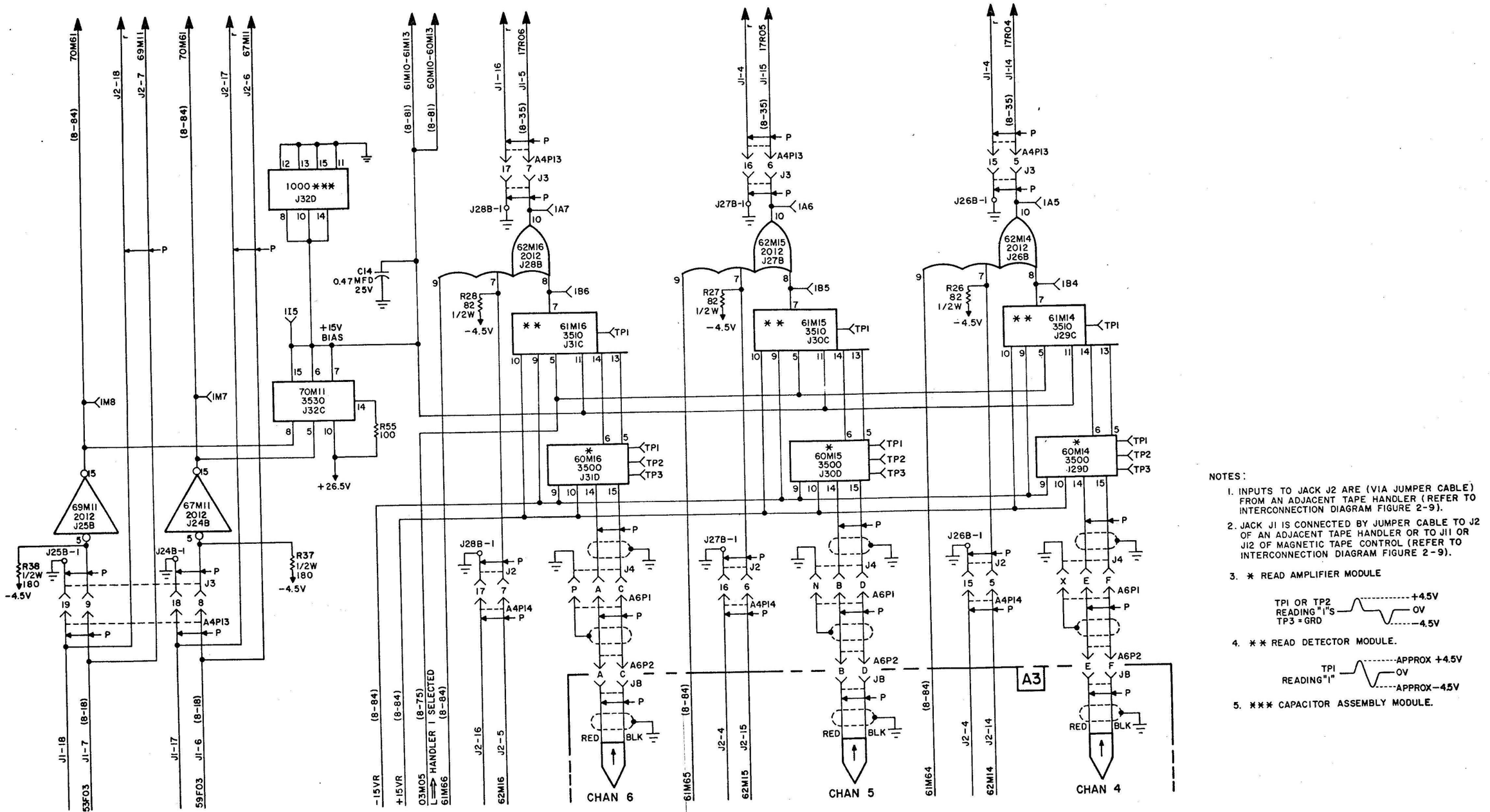

REPRODUCED FROM UNIVAC DWG NO 7030279 REV A

NOTES:

1. INPUTS TO JACK J2 ARE (VIA JUMPER CABLE) FROM AN ADJACENT TAPE HANDLER (REFER TO INTERCONNECTION DIAGRAM FIGURE 2-9).
2. JACK J1 IS CONNECTED BY JUMPER CABLE TO J2 OF AN ADJACENT TAPE HANDLER OR TO J11 OR J12 OF MAGNETIC TAPE CONTROL (REFER TO INTERCONNECTION DIAGRAM FIGURE 2-9).
3. * READ AMPLIFIER MODULE

4. ** READ DETECTOR MODULE.

5. *** CAPACITOR ASSEMBLY MODULE.

Figure 8-82. 1540 Tape Handler 1, Read Amplifiers and Detectors, Bits 4-6, Functional Schematic

REVISIONS						
SYM	ZONE	EIT	DESCRIPTION	DIR	DATE	APPROVED

(8-81) 62M13
(8-81) 62M12
(8-81) 62M11
(8-81) 62M10

2B3
2B2
2B1
2A8

61M63 3510 J21C
61M62 3510 J20C
61M61 3510 J19C
61M60 3510 J18C

60M63 3500 J21D
60M62 3500 J20D
60M61 3500 J19D
60M60 3500 J18D

TPI
TP2
TP3

A6P1
A6P2
JB
J6

CHAN 3
CHAN 2
CHAN 1
CHAN 0

A16
A17

70M61 (8-84) +15V BIAS
-15VR (8-84)
+15VR (8-84)
03M55 (8-77) L ⟹ HANDLER 2 SELECTED

NOTES:
1. * READ AMPLIFIER MODULE.

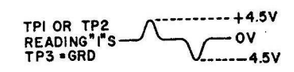

2. ** READ DETECTOR MODULE.

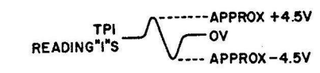

FIGURE 8-83

QTY REQD	FIND	REF DES	CODE IDENT	DWG SIZE	PART OR IDENTIFYING NO.	NOMENCLATURE OR DESCRIPTION

LIST OF MATERIAL

IDENT NO. 7030280-00

THIS DOCUMENT CONTAINS CONFIDENTIAL INFORMATION OF THE UNIVAC DIVISION OF SPERRY RAND CORPORATION AND IS FURNISHED PURSUANT TO THE FOLLOWING INSTRUMENT:

ON THE UNDERSTANDING THAT THIS DOCUMENT AND THE INFORMATION THEREON MAY NOT BE DEALT WITH IN ANY MANNER EXCEPT AS PERMITTED BY THE TERMS OF THAT INSTRUMENT OR AS OTHERWISE PERMITTED IN WRITING BY THE UNIVAC DIVISION OF SPERRY RAND CORPORATION

UNLESS OTHERWISE SPECIFIED
DIMENSION IN INCHES. TOLERANCE ON
2 PLACE DECIMALS ± | 3 PLACE DECIMALS ± | ANGLES ±
HOLE DIAMETER TOLERANCE
0 THRU .250 +.003 −.002 | .251 THRU .300 +.005 −.005 | .301 & LARGER +.010 −.005
THREADS: EXT CL 2A, INT CL 2B
MATERIAL
FINISH
NEXT ASSY | EQUIPMENT
APPLICATION
COMM CITY CODE

LAYOUT		DATE
DRAFTSMAN	D.MUHS	6-2-65
CHECKER	B. POPOV	10-28-65
ENGINEER	R.D. MCCUMBER	10-28-65
APPROVAL		

CLASS A

UNIVAC
DIVISION OF SPERRY RAND CORPORATION

TITLE: FUNCTIONAL SCHEMATIC, 1540 TAPE HANDLER 2, READ AMPLIFIERS AND DETECTORS BITS 0-3

CODE IDENT NO.	SIZE	DWG NO.
90536	D	7030280

SCALE | WEIGHT | SHEET 1 OF 1

REVISIONS						
SYM	ZONE	EIR	DESCRIPTION	CHK	DATE	APPROVED
A		69704	SEE EIR		2-11-66	T.C.B.

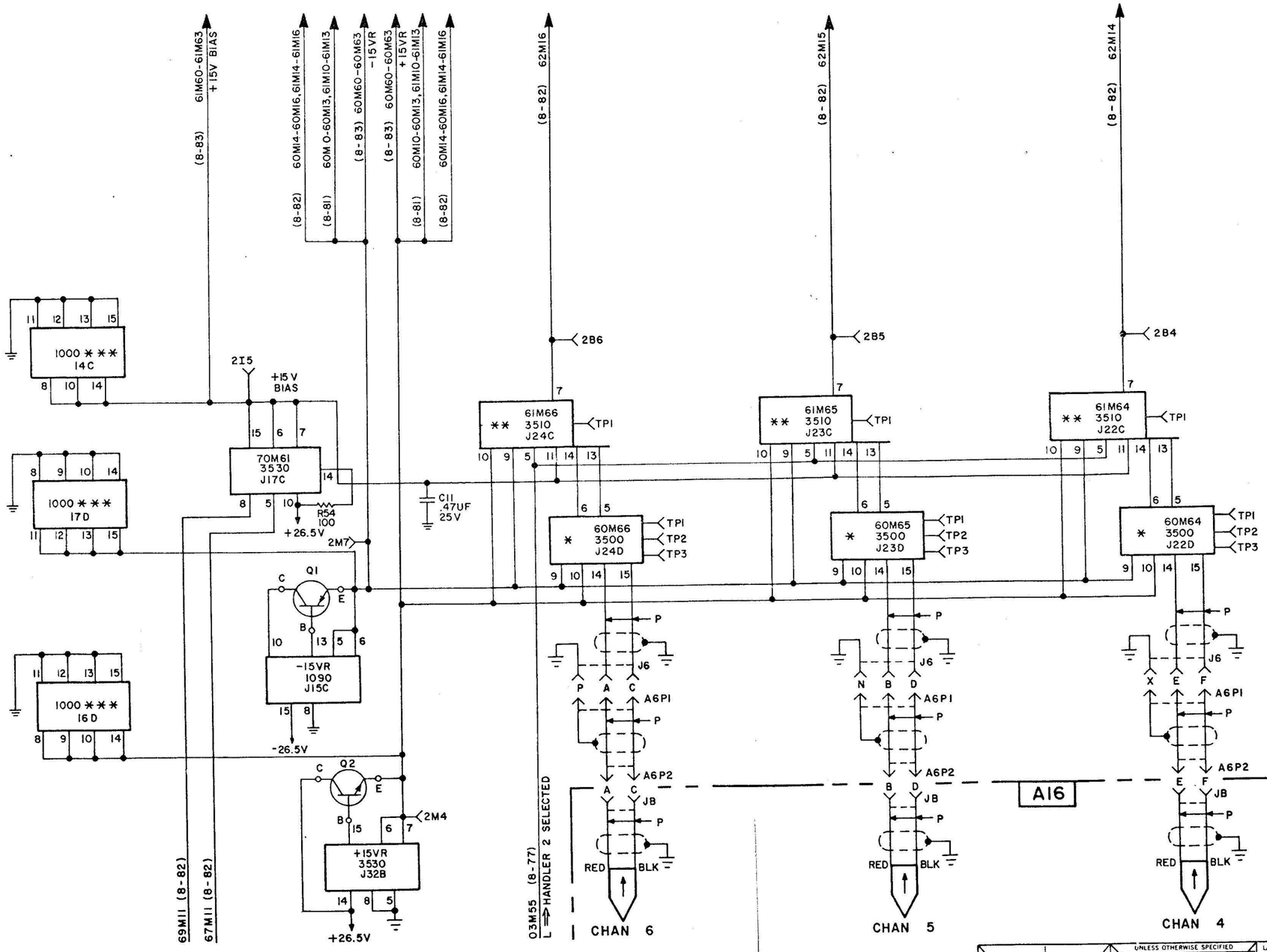

NOTES:

1. * READ AMPLIFIER MODULE.

TPI OR TP2 READING "1"S TP3 = GRD: +4.5V, 0V, -4.5V

2. ** READ DETECTOR MODULE.

TPI READING "1"S: APPROX +4.5V, 0V, APPROX -4.5V

3. *** CAPACITOR ASSEMBLY MODULE.

FIGURE 8-84

QTY REQD	FIND	REF DES	CODE IDENT	DWG SIZE	PART OR IDENTIFYING NO.	NOMENCLATURE OR DESCRIPTION

LIST OF MATERIAL

IDENT NO. 7030281-00

THIS DOCUMENT CONTAINS CONFIDENTIAL INFORMATION OF THE UNIVAC DIVISION OF SPERRY RAND CORPORATION AND IS FURNISHED PURSUANT TO THE FOLLOWING INSTRUMENT

ON THE UNDERSTANDING THAT THIS DOCUMENT AND THE INFORMATION THEREIN, MAY NOT BE DEALT WITH IN ANY MANNER EXCEPT FOR THE PURPOSES OF THAT INSTRUMENT OR AS OTHERWISE PERMITTED, IN WRITING BY THE UNIVAC DIVISION OF SPERRY RAND CORPORATION

UNLESS OTHERWISE SPECIFIED
DIMENSION IN INCHES. TOLERANCE ON 2 PLACE DECIMALS ±, 3 PLACE DECIMALS ±, ANGLES ±
HOLE DIAMETER TOLERANCE: 0 THRU .250 +.003 −.002; .251 THRU .500 +.005 −.003; .501 & LARGER +.010 −.005
THREADS EXT CL 2A, INT CL 2B
MATERIAL
FINISH
NEXT ASSY
EQUIPMENT
APPLICATION
COMMODITY CODE

LAYOUT		DATE
DRAFTSMAN	R. R. PFUTZENREUTER	6-2-65
CHECKER	B. POPOV	VAB 10/28/65
ENGINEER	R.D. MCCUMBER	R.D.M. 10-28-65
APPROVAL	R. C. Hinckley	10-28-65

CLASS A

UNIVAC
DIVISION OF SPERRY RAND CORPORATION

TITLE: FUNCTIONAL SCHEMATIC, 1540 TAPE HANDLER 2, READ AMPLIFIERS AND DETECTORS, BITS 4-6

CODE IDENT NO.	SIZE	DWG NO.
90536	D	7030281

SCALE | WEIGHT | SHEET 1 OF 1

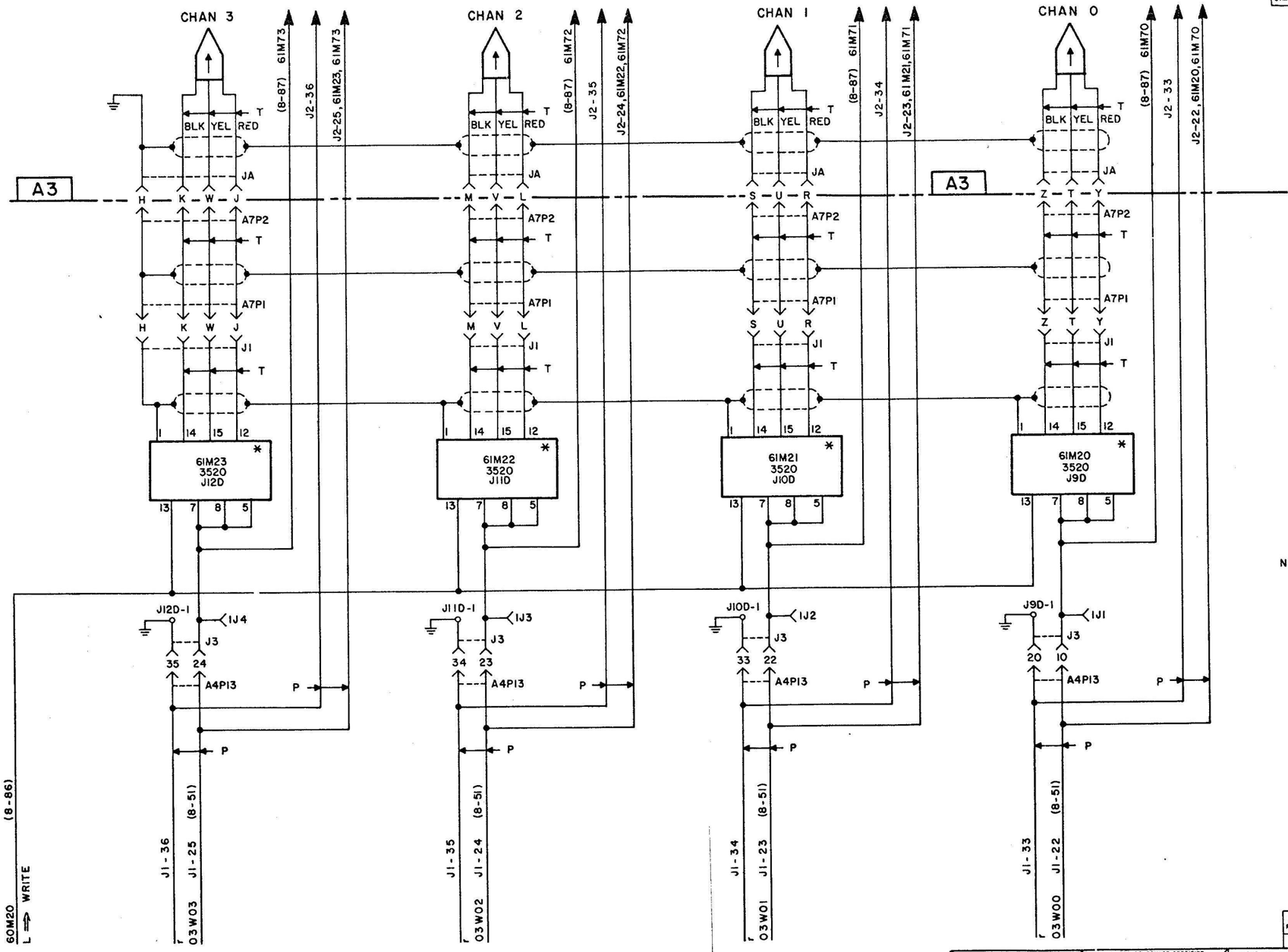

REVISIONS						
SYM	ZONE	EIR	DESCRIPTION	CHK	DATE	APPROVED

A17

NOTE:

1. −26.5V FROM J2D-9 TO PIN 9 OF J9D THRU J15D.
2. INPUTS TO JACK J1 ARE (VIA JUMPER CABLE) FROM JACK J11 OR J12 OF MAGNETIC TAPE CONTROL OR FROM JACK J2 OF ADJACENT TAPE HANDLER (REFER TO INTERCONNECTION DIAGRAM FIGURE 2-9).
3. OUTPUTS OF JACK J2 ARE (VIA JUMPER CABLE) TO JACK J1 OF ADJACENT TAPE HANDLER (REFER TO INTERCONNECTION DIAGRAM FIGURE 2-9).
4. * WRITE AMPLIFIER MODULE.

FIGURE 8-85

QTY REQD	FIND	REF DES	CODE IDENT	DWG SIZE	PART OR IDENTIFYING NO.	NOMENCLATURE OR DESCRIPTION

LIST OF MATERIAL

IDENT NO. 7030274-00

THIS DOCUMENT CONTAINS CONFIDENTIAL INFORMATION OF THE UNIVAC DIVISION OF SPERRY RAND CORPORATION AND IS FURNISHED PURSUANT TO THE FOLLOWING INSTRUMENT

ON THE UNDERSTANDING THAT THIS DOCUMENT AND THE INFORMATION THEREON MAY NOT BE DEALT WITH IN ANY MANNER EXCEPT FOR THE PURPOSES OF THAT INSTRUMENT OR AS OTHERWISE PERMITTED IN WRITING BY THE UNIVAC DIVISION OF SPERRY RAND CORPORATION.

UNLESS OTHERWISE SPECIFIED
DIMENSION IN INCHES. TOLERANCE ON
2 PLACE DECIMALS ±
3 PLACE DECIMALS ±
ANGLES ±
HOLE DIAMETER TOLERANCE
0 THRU .250 +.003 −.002
.251 THRU .500 +.005 −.003
.501 & LARGER +.010 −.005
THREADS: EXT CL 2A, INT CL 2B
MATERIAL
FINISH
NEXT ASSY
EQUIPMENT
APPLICATION
COMMODITY CODE

LAYOUT		DATE
DRAFTSMAN	R. M. BECKMAN	6-2-65
CHECKER	B. POPOV	10/28/65
ENGINEER	R.D. MCGUMBER	10-28-65
APPROVAL		10-28-65

CLASS A

UNIVAC
DIVISION OF SPERRY RAND CORPORATION

TITLE
FUNCTIONAL SCHEMATIC,
1540 TAPE HANDLER 1
WRITE AMPLIFIERS, PART 1

CODE IDENT NO.	SIZE	DWG NO.
90536	D	7030274

SCALE | WEIGHT | SHEET 1 OF 1

REVISIONS						
SYM	ZONE	EIR	DESCRIPTION	CHK	DATE	APPROVED
A		69704	SEE EIR	[illegible]	5-11-64	[illegible]

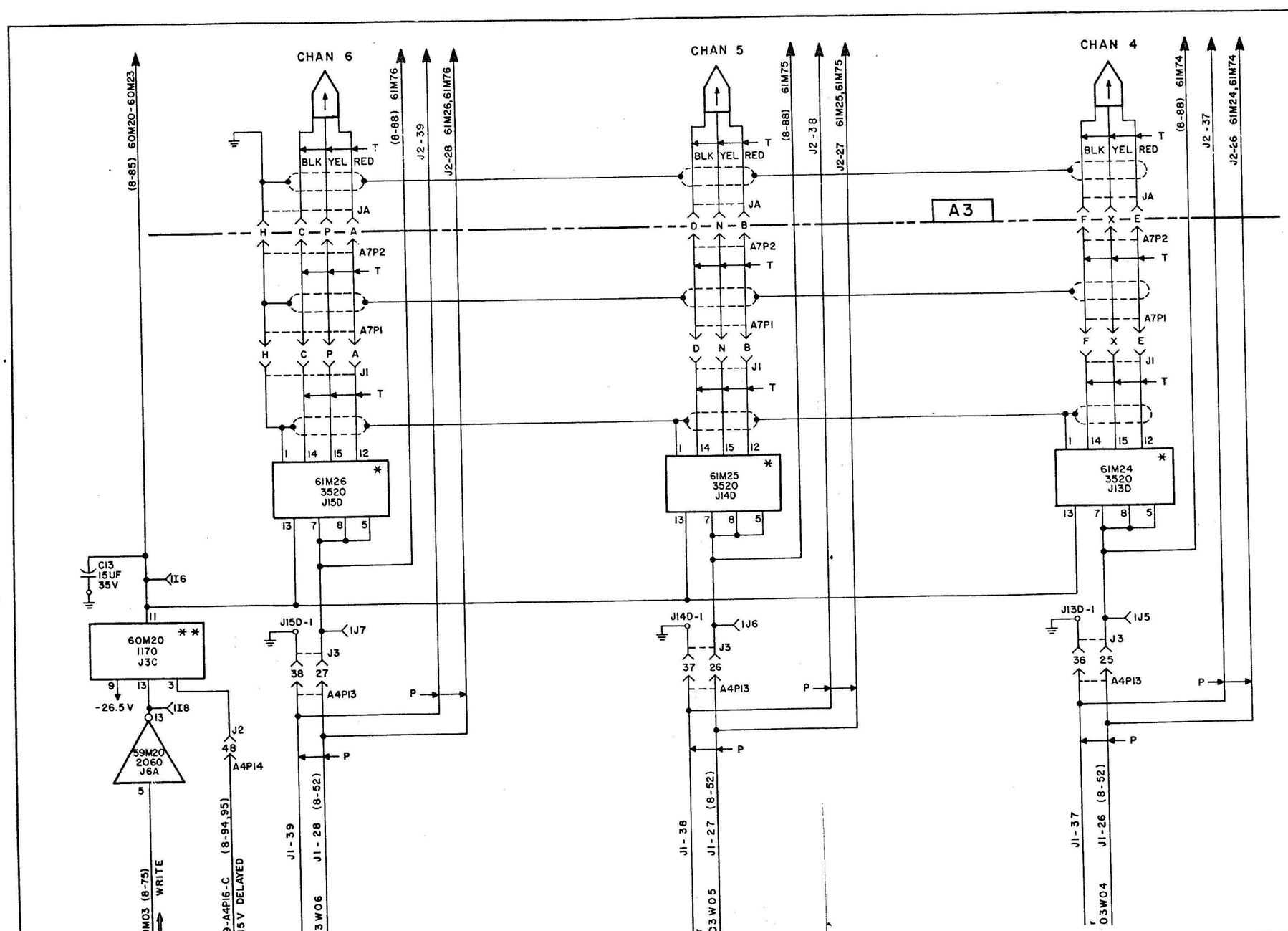

A17

NOTE:
1. -26.5V FROM J2D-9 TO PIN 9 OF J9D THRU J15D.
2. INPUTS TO JACK J1 ARE (VIA JUMPER CABLE) FROM JACK J11 OR J12 OF MAGNETIC TAPE CONTROL OR FROM JACK J2 OF ADJACENT TAPE HANDLER (REFER TO INTERCONNECTION DIAGRAM FIGURE 2-9).
3. OUTPUTS OF JACK J2 ARE (VIA JUMPER CABLE) TO JACK J1 OF ADJACENT TAPE HANDLER (REFER TO INTER-CONNECTION DIAGRAM FIGURE 2-9).
4. * WRITE AMPLIFIER MODULE.
5. ** WRITE ENABLE AMPLIFIER MODULE.

FIGURE 8-86

QTY REQD	FIND	REF DES	CODE IDENT	DWG SIZE	PART OR IDENTIFYING NO.	NOMENCLATURE OR DESCRIPTION

LIST OF MATERIAL

IDENT NO. 7030275-00

THIS DOCUMENT CONTAINS CONFIDENTIAL INFORMATION OF THE UNIVAC DIVISION OF SPERRY RAND CORPORATION AND IS FURNISHED PURSUANT TO THE FOLLOWING INSTRUMENT:

ON THE UNDERSTANDING THAT THIS DOCUMENT AND THE INFORMATION THEREON MAY NOT BE DEALT WITH IN ANY MANNER EXCEPT FOR THE PURPOSES OF THAT INSTRUMENT OR AS OTHERWISE PERMITTED IN WRITING BY THE UNIVAC DIVISION OF SPERRY RAND CORPORATION

UNLESS OTHERWISE SPECIFIED
DIMENSION IN INCHES. TOLERANCE ON
2 PLACE DECIMALS ± | 3 PLACE DECIMALS ± | ANGLES ±
HOLE DIAMETER TOLERANCE
0 THRU .250 +.003 −.002 | .251 THRU .500 +.005 −.005 | .501 & LARGER +.010 −.005
THREADS: EXT CL 2A, INT CL 2B
MATERIAL
FINISH
NEXT ASSY | EQUIPMENT
APPLICATION
COMMODITY CODE

		DATE
LAYOUT		
DRAFTSMAN	R. M. BECKMAN	6-1-65
CHECKER	B. POPOV	6/28 6/28/65
ENGINEER	R.D. MCCUMBER	R.D.M. 10-28-65
APPROVAL	R Hanley	10-28-65

CLASS A

UNIVAC
DIVISION OF SPERRY RAND CORPORATION

TITLE
FUNCTIONAL SCHEMATIC, 1540 TAPE HANDLER 1 WRITE AMPLIFIERS, PART 2

CODE IDENT NO.	SIZE	DWG NO.
90536	D	7030275

SCALE | WEIGHT | SHEET 1 OF 1

REVISIONS						
SYM	ZONE	EIR	DESCRIPTION	CHK	DATE	APPROVED
A		69697	SEE EIR	PF	4-1-66	A.W.B.

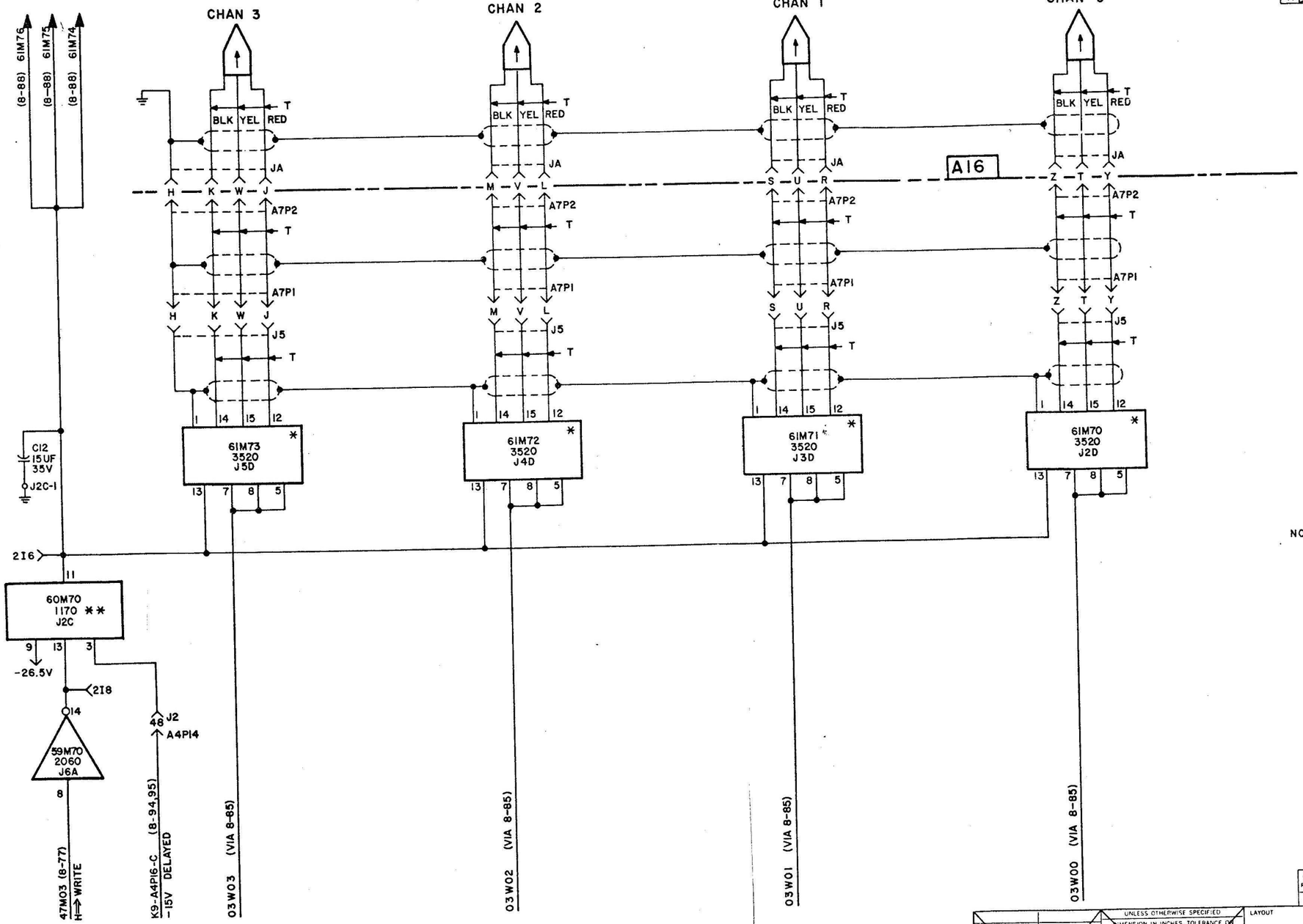

A17

NOTE:
1. -26.5V FROM J15C-15 TO PIN 9 OF J2D THRU J8D.
2. * WRITE AMPLIFIER MODULE.
3. * *WRITE ENABLE AMPLIFIER MODULE.

FIGURE 8-87

QTY REQD	FIND	REF DES	CODE IDENT	DWG SIZE	PART OR IDENTIFYING NO.	NOMENCLATURE OR DESCRIPTION

LIST OF MATERIAL

IDENT NO. 7030276-00

THIS DOCUMENT CONTAINS CONFIDENTIAL INFORMATION OF THE UNIVAC DIVISION OF SPERRY RAND CORPORATION AND IS FURNISHED PURSUANT TO THE FOLLOWING INSTRUMENT

ON THE UNDERSTANDING THAT THIS DOCUMENT AND THE INFORMATION THEREIN WILL NOT BE DISCLOSED IN ANY MANNER EXCEPT FOR THE PURPOSES FOR WHICH THE INSTRUMENT OR OTHERWISE PERMITTED IN WRITING BY THE UNIVAC DIVISION OF SPERRY RAND CORPORATION

UNLESS OTHERWISE SPECIFIED
DIMENSION IN INCHES TOLERANCE ON
2 PLACE DECIMALS ± | 3 PLACE DECIMALS ± | ANGLES ±
HOLE DIAMETER TOLERANCE
0 THRU .250 +.003 -.002 | .251 THRU .500 +.005 -.003 | .501 & LARGER +.010 -.005
THREADS EXTERNAL INT CL 2B
MATERIAL
FINISH
NEXT ASSY | EQUIPMENT
APPLICATION
COMMODITY CODE

		DATE
LAYOUT		
DRAFTSMAN	R.R. PFUTZENREUTER	6-3-65
CHECKER	B. POPOV	10/28/65
ENGINEER	R.D. MCCUMBER	10-28-65
APPROVAL		10-28-65

CLASS A

UNIVAC
DIVISION OF SPERRY RAND CORPORATION

TITLE
FUNCTIONAL SCHEMATIC, 1540 TAPE HANDLER 2 WRITE AMPLIFIERS, PART 1

CODE IDENT NO.	SIZE	DWG NO.
90536	D	7030276

SCALE | WEIGHT | SHEET 1 OF 1

REVISIONS						
SYM	ZONE	EIR	DESCRIPTION	CHK	DATE	APPROVED

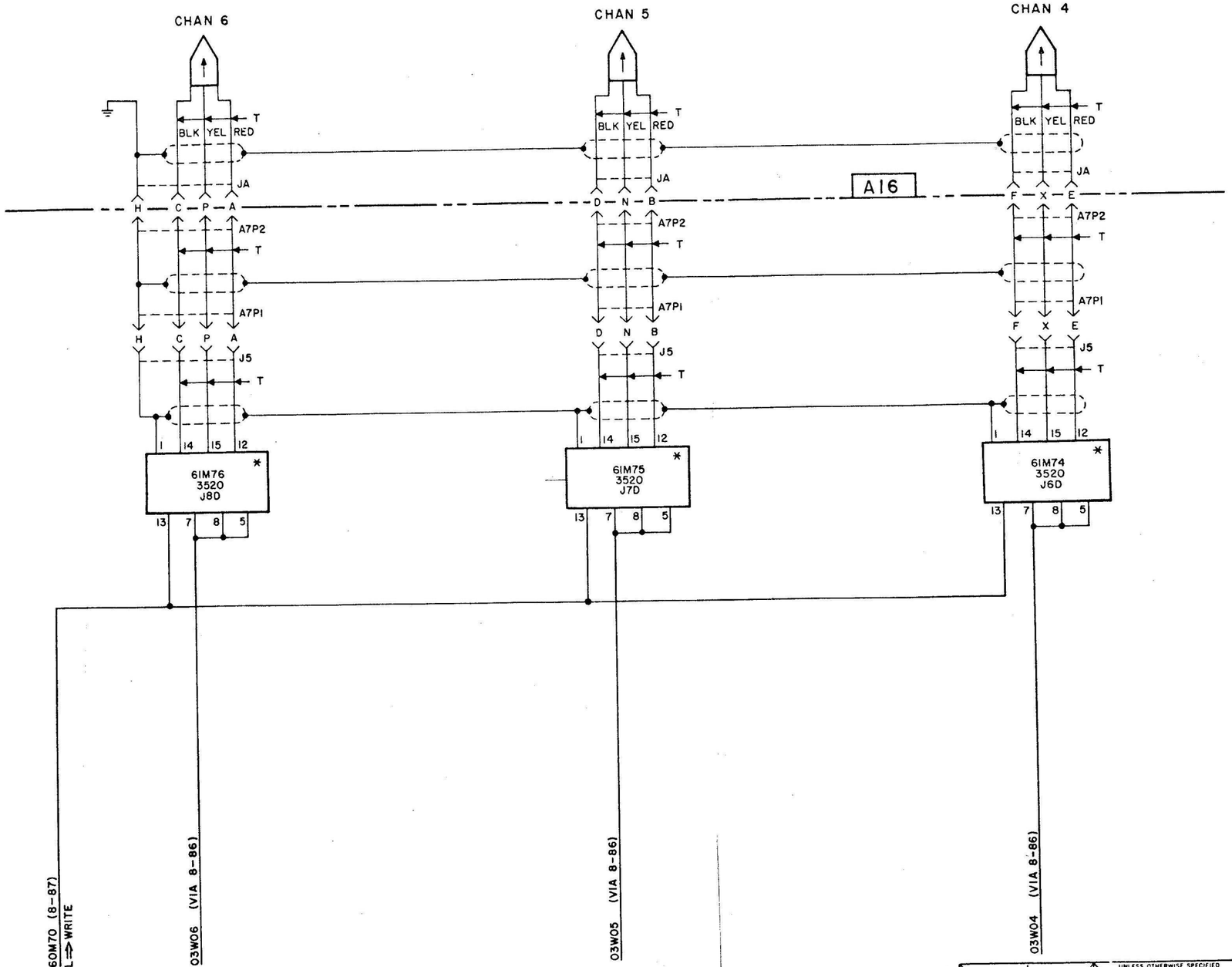

A17

NOTE:
1. −26.5V FROM J15C−15 TO PIN 9 OF J2D THRU J8D.
2. * WRITE AMPLIFIER MODULE.

FIGURE 8-88

QTY REQD	FIND	REF DES	CODE IDENT	DWG SIZE	PART OR IDENTIFYING NO.	NOMENCLATURE OR DESCRIPTION

LIST OF MATERIAL

IDENT NO. 7030277-00

THIS DOCUMENT CONTAINS CONFIDENTIAL INFORMATION OF THE UNIVAC DIVISION OF SPERRY RAND CORPORATION AND IS FURNISHED PURSUANT TO THE FOLLOWING INSTRUMENT

ON THE UNDERSTANDING THAT THIS DOCUMENT AND THE INFORMATION THEREON MAY NOT BE DEALT WITH IN ANY MANNER EXCEPT FOR THE PURPOSES OF THAT INSTRUMENT OR AS OTHERWISE PERMITTED IN WRITING BY THE UNIVAC DIVISION OF SPERRY RAND CORPORATION

UNLESS OTHERWISE SPECIFIED
DIMENSION IN INCHES. TOLERANCE ON
2 PLACE DECIMALS ± | 3 PLACE DECIMALS ± | ANGLES ±
HOLE DIAMETER TOLERANCE
0 THRU 250 +.003 −.002 | 251 THRU 300 +.005 −.003 | 301 & LARGER +.010 −.005
THREADS. EXT. CL. 2A. INT CL 2B
MATERIAL
FINISH
NEXT ASSY | EQUIPMENT
APPLICATION
COMMODITY CODE

		DATE
LAYOUT		
DRAFTSMAN D. STATTS		6-2-65
CHECKER B. POPOV	VOB B.P.	10-28-65
ENGINEER R.D. MCCUMBER	R.D.M.	10-28-65
APPROVAL		10-28-65

CLASS A

UNIVAC
DIVISION OF SPERRY RAND CORPORATION

TITLE
FUNCTIONAL SCHEMATIC,
1540 TAPE HANDLER 2
WRITE AMPLIFIERS PART 2

CODE IDENT NO.	SIZE	DWG NO.
90536	D	7030277

SCALE | WEIGHT | SHEET 1 OF 1

REVISIONS						
LTR	ZONE	EIR	DESCRIPTION	BY	DATE	APPROVED
A		69699	SEE EIR		4-11-66	J.W.R
B		91503	SEE EIR		4-27-67	[illegible]
C		91505	SEE EIR		5-26-67	[illegible]
D		91651	SEE EIR		7-17-67	[illegible]

(8-90) 92680

(8-90) 50G50

(8-90) 92655

(8-90) 50G50

(8-90) 92G55

0XG58 FF 2930 J2A — IF14

0XG55 FF 2930 J2A — IE15

0XG57 FF 2930 J3A — IG14

0XG54 FF 2930 J4A — ID15

0XG56 FF 2930 J3A — IC15

0XG53 FF 2930 J4A — IF15

02G52 2070 J3C — ID20

30G52 2990 J6B

30G51 2990 J6B

30G50 2990 J6B

SS 03G52 3290 J10C — IA17

SS 03G51 3290 J10C — IB17

SS 03G50 3290 J10C — IC17

0XG52 FF 2020 J4B — IC16 — 800 DENSITY — DS8H

0XG51 FF 2020 J3B — IG16 — 556 DENSITY — DS8G

0XG50 FF 2020 J2B — ID17 — 200 DENSITY — DS8F

20G50 2012 J25D — 2G30

23G50 2060 J25G — 2E32

21G50 2990 J2C — ID16

21G51 2990 J8B — IB16

21G52 2990 J2D — IE16

19G50 2060 J4F

IE31

IA15

91G80 3060 J5A — OSC AMP

90G80 * J6A — CRYSTAL

200 AND 800 BPI OSC

ID29

91G55 3060 J5C — OSC AMP

90G55 ** J6C — CRYSTAL

556 BPI OSC

51F91 (8-30) H ⟹ PRINTER

00T80 (8-8) H ⟹ DENSITY SELECT

57V00 (8-28) H ⟹ MCLR

59V00 (8-28) L ⟹ MCLR

03C06 (8-56) H ⟹ 200 + 800 BPI

03C05 (8-56) H ⟹ 556 + 200 BPI

02C06 (8-56) H ⟹ 556 BPI + SAME AS LAST DENSITY

50F92 (8-30) L ⟹ 1240 MODE

00C05 (8-56) H ⟹ 800 BPI + SAME AS LAST DENSITY

NOTE:

1. DENSITY CODE TRANSLATIONS:

CODE		DENSITY
C6	C5	
0	0	200 BPI
1	0	556 BPI
0	1	800 BPI
1	1	SAME AS LAST INSTRUCTIONS

2. WHEN POWER ON MASTER CLEAR, THE CLOCK STARTS AT LOW DENSITY (200 BPI), BECAUSE C6 AND C5 ARE CLEARED.

3. * 2.88 MC CRYSTAL MODULE TYPE 7003090 FOR 1541 MTU. 2.31 MC CRYSTAL MODULE TYPE 7104170 FOR 1540 MTU.

4. ** 2 MC CRYSTAL MODULE TYPE 7003550 FOR 1541 MTU. 1.6 MC CRYSTAL MODULE TYPE 7104160 FOR 1540 MTU.

A12A2

FIGURE 8-89

QTY REQD	FIND	REF DES	CODE IDENT	DWG SIZE	PART OR IDENTIFYING NO.	NOMENCLATURE OR DESCRIPTION

LIST OF MATERIAL

IDENT NO. 7030236-00

THIS DOCUMENT CONTAINS CONFIDENTIAL INFORMATION OF THE UNIVAC DIVISION OF SPERRY RAND CORPORATION AND IS FURNISHED PURSUANT TO THE FOLLOWING INSTRUMENT

ON THE UNDERSTANDING THAT THIS DRAWING AND THE INFORMATION THEREON MAY NOT BE DEALT WITH IN ANY MANNER EXCEPT IN THE PURPOSES OF THAT INSTRUMENT OR AS OTHERWISE PERMITTED IN WRITING BY THE UNIVAC DIVISION OF SPERRY RAND CORPORATION

UNLESS OTHERWISE SPECIFIED
DIMENSION IN INCHES TOLERANCE ON
2 PLACE DECIMALS ± | 3 PLACE DECIMALS ± | ANGLES ±
HOLE DIAMETER TOLERANCE
0 THRU 250 +.003 −.002 | 251 THRU 500 +.005 −.003 | 501 & LARGER +.010 −.005
THREADS EXTERNAL INT CL 2B
MATERIAL
NEXT ASSY | EQUIPMENT
APPLICATION
USED ON | CODE
FINISH

		DATE
LAYOUT		
DRAFTSMAN	J R CURTIS	4-14-65
CHECKER	B. POPOV	[illegible]
ENGINEER	R.D. MCCUMBER	[illegible]
APPROVAL	[illegible]	[illegible]

CLASS A

UNIVAC
DIVISION OF SPERRY RAND CORPORATION

TITLE
FUNCTIONAL SCHEMATIC, CLOCK LOGIC, PART 1

CODE IDENT NO.	SIZE	DWG NO.
90536	D	7030236

SCALE | WEIGHT | SHEET 1 OF 1

REVISIONS						
SYM	ZONE	EIR	DESCRIPTION	CHK	DATE	APPROVED

A12A2

FIGURE 8-90

QTY REQD	FIND	REF DES	CODE IDENT	DWG SIZE	PART OR IDENTIFYING NO.	NOMENCLATURE OR DESCRIPTION

LIST OF MATERIAL

IDENT NO. 7030237-00

THIS DOCUMENT CONTAINS CONFIDENTIAL INFORMATION OF THE UNIVAC DIVISION OF SPERRY RAND CORPORATION AND IS FURNISHED PURSUANT TO THE FOLLOWING RESTRICTIVE AGREEMENT

ON THE UNDERSTANDING THAT THIS DOCUMENT AND THE INFORMATION THEREIN SHALL NOT BE DISCLOSED TO OTHERS, MADE, USED OR REPRODUCED IN WHOLE OR IN PART NOW OR BY THE RECIPIENT EXCEPT AS SPERRY RAND CORPORATION SHALL OTHERWISE EXPRESSLY AUTHORIZE IN WRITING.

UNLESS OTHERWISE SPECIFIED
DIMENSION IN INCHES. TOLERANCE ON 2 PLACE DECIMALS ±, 3 PLACE DECIMALS ±, ANGLES ±
HOLE DIAMETER TOLERANCE: 0 THRU .250 -.003 -.002; .251 THRU .500 -.005 -.003; .501 & LARGER -.010 -.005
THREADS EXTERNAL 2A, INTERNAL 2B
MATERIAL
FINISH
NEXT ASSY | EQUIPMENT
APPLICATION
COMMODITY CODE

LAYOUT		DATE
DRAFTSMAN	J R CURTIS	4-15-65
CHECKER	B. POPOV	10/28/65
ENGINEER	R.D MCCUMBER	10-28-65
APPROVAL		10/28/65

CLASS A

UNIVAC
DIVISION OF SPERRY RAND CORPORATION

TITLE
FUNCTIONAL SCHEMATIC,
CLOCK LOGIC, PART 2

CODE IDENT NO.	SIZE	DWG NO.
90536	D	7030237

SCALE | WEIGHT | SHEET 1 OF 1

REVISIONS						
SYM	ZONE	E/R	DESCRIPTION	BY	DATE	APPROVED

A12A2

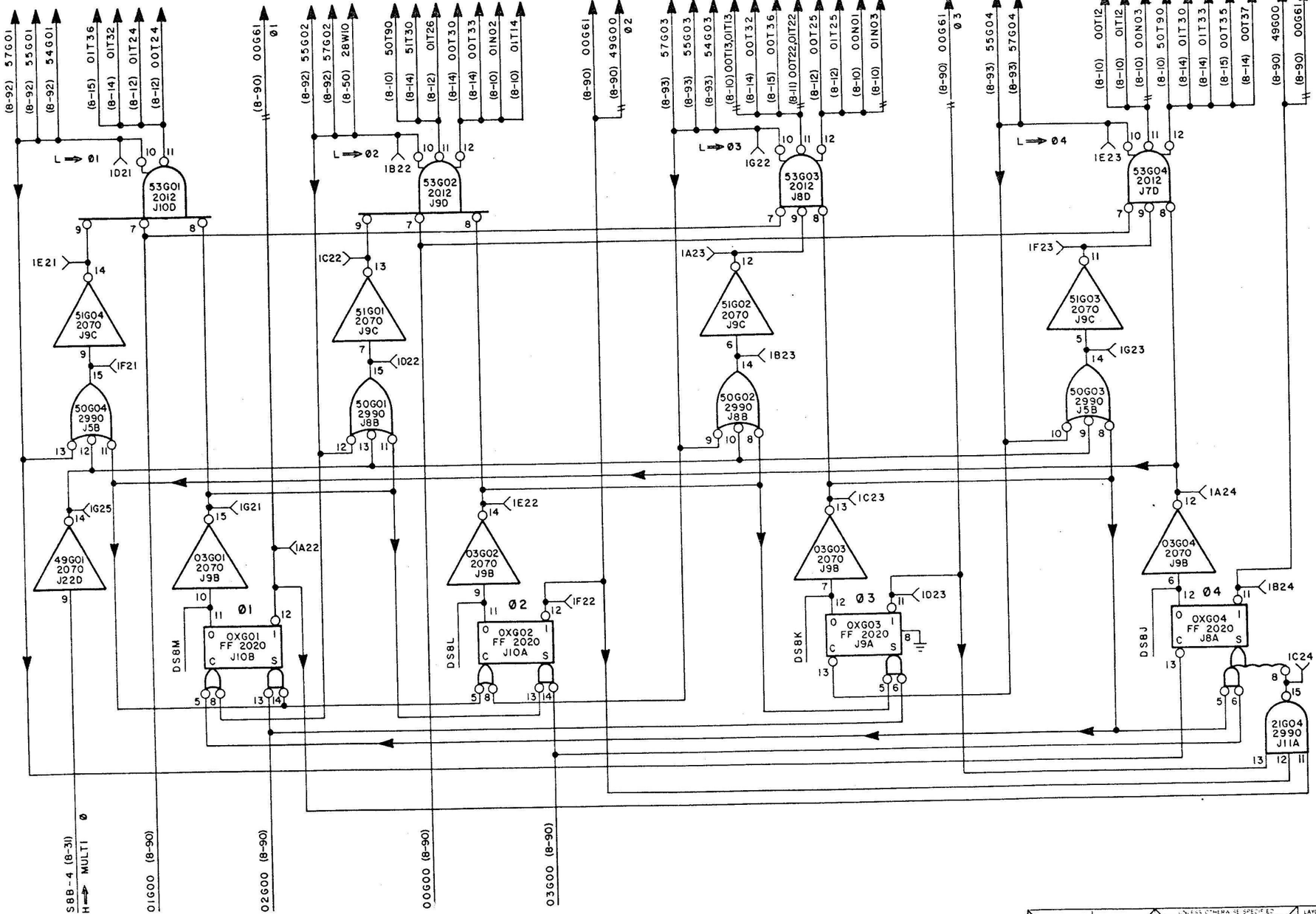

FIGURE 8-91

QTY REQD	FIND	REF DES	CODE IDENT	DWG SIZE	PART OR IDENTIFYING NO	NOMENCLATURE OR DESCRIPTION

LIST OF MATERIAL

IDENT NO. 7030238-00

UNLESS OTHERWISE SPECIFIED
DIMENSIONS IN INCHES TOLERANCE ON
3 PLACE DECIMALS ± .005
2 PLACE DECIMALS ± .010
ANGLES ±
MACHINED SURFACE FINISH
THREADS CLASS 3 INT 2B
MATERIAL
NEXT ASSY | USED ON
APPLICATION
FINISH

LAYOUT
DRAFTSMAN J R CURTIS 4-13-65
CHECKER B POPOV VOB 6-2
ENGINEER R D MCCUMBER R.D.M 10-20-65
APPROVED T C Hinckley 10-25-65

UNIVAC
DIVISION OF SPERRY RAND CORPORATION

CLASS A
TITLE FUNCTIONAL SCHEMATIC, CLOCK LOGIC, PART 3
CODE IDENT NO 90536
SIZE D
DWG NO 7030238
SCALE
WEIGHT
SHEET 1 OF 1

REVISIONS						
SYM	ZONE	EIR	DESCRIPTION	CHK	DATE	APPROVED
A		69697	SEE EIR		4-1-66	G.W.B.

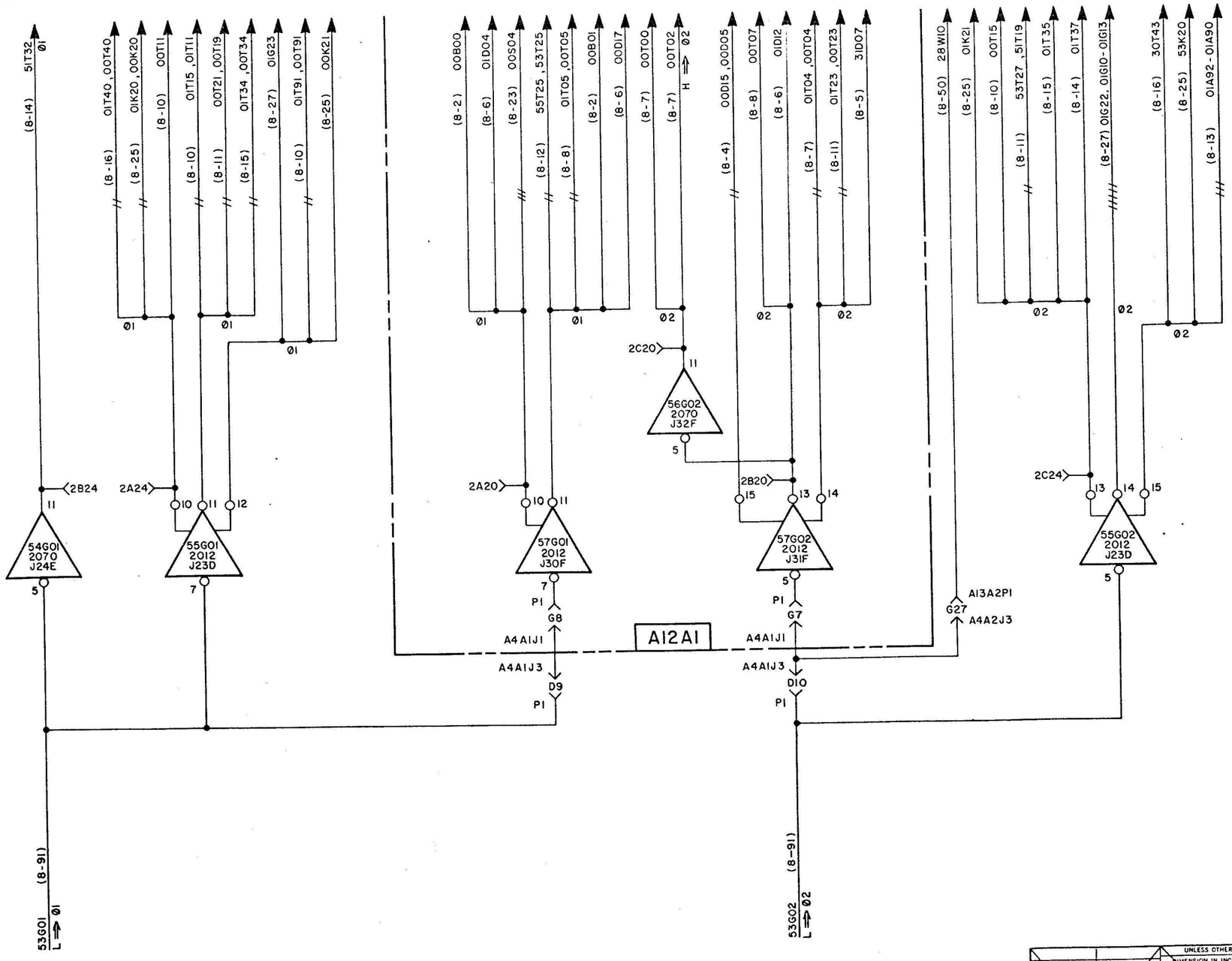

FIGURE 8-92

QTY REQD	FIND	REF DES	CODE IDENT	DWG SIZE	PART OR IDENTIFYING NO.	NOMENCLATURE OR DESCRIPTION

LIST OF MATERIAL

IDENT NO. 7030232-00

THIS DOCUMENT CONTAINS CONFIDENTIAL INFORMATION OF THE UNIVAC DIVISION OF SPERRY RAND CORPORATION AND IS FURNISHED PURSUANT TO THE FOLLOWING INSTRUMENT:

ON THE UNDERSTANDING THAT THIS DOCUMENT AND THE INFORMATION THEREIN MAY NOT BE DEALT WITH IN ANY MANNER EXCEPT FOR THE PURPOSES OF THAT INSTRUMENT OR AS OTHERWISE PERMITTED IN WRITING BY THE UNIVAC DIVISION OF SPERRY RAND CORPORATION

UNLESS OTHERWISE SPECIFIED
DIMENSION IN INCHES. TOLERANCE ON
2 PLACE DECIMALS ± | 3 PLACE DECIMALS ± | ANGLES ±
HOLE DIAMETER TOLERANCE
0 THRU 250 +.003 −.002 | 251 THRU 500 +.005 −.003 | 501 & LARGER +.010 −.005
THREADS: EXT CL 2A, INT CL 2B
MATERIAL
FINISH
NEXT ASSY | EQUIPMENT
APPLICATION
COMMODITY CODE

		DATE
LAYOUT		
DRAFTSMAN	J R CURTIS	4-5-65
CHECKER	B. POPOV	VAB EP 10/28/65
ENGINEER	R.D. MCCUMBER	R.D.M. 10-28-65
APPROVAL		10-28-65

CLASS A

UNIVAC
DIVISION OF SPERRY RAND CORPORATION

TITLE
FUNCTIONAL SCHEMATIC, CLOCK DISTRIBUTION, PHASE 1 AND 2

CODE IDENT NO.	SIZE	DWG NO.
90536	D	7030232

SCALE | WEIGHT | SHEET 1 OF 1

REVISIONS						
SYM	ZONE	EIR	DESCRIPTION	DWN	DATE	APPROVED
A		69697	SEE EIR			
B		90495	SEE EIR			

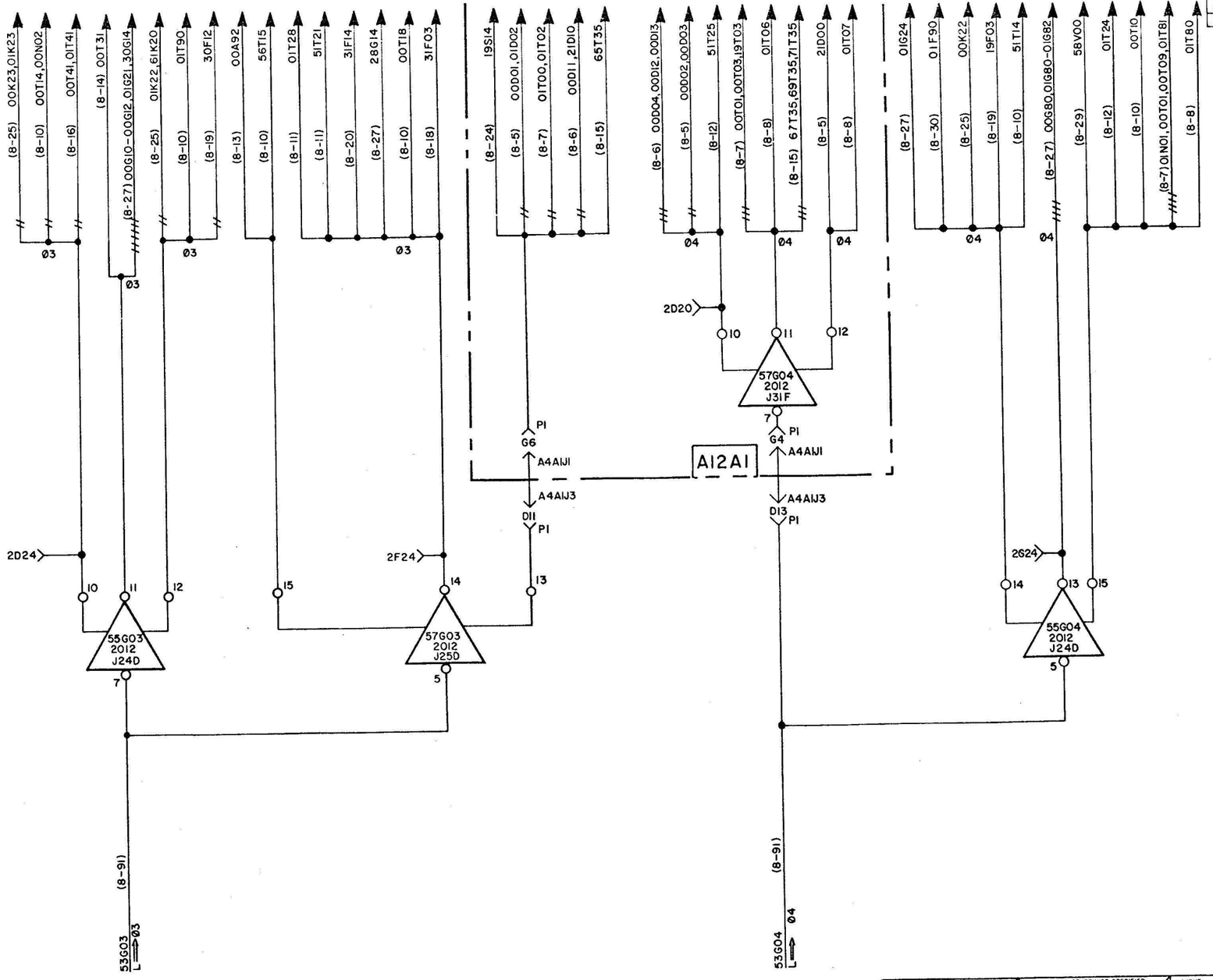

FIGURE 8-93

QTY REQD	FIND	REF DES	CODE IDENT	DWG SIZE	PART OR IDENTIFYING NO.	NOMENCLATURE OR DESCRIPTION

LIST OF MATERIAL

IDENT NO. 7030233-00

THIS DOCUMENT CONTAINS CONFIDENTIAL INFORMATION OF THE UNIVAC DIVISION OF SPERRY RAND CORPORATION AND IS FURNISHED PURSUANT TO THE FOLLOWING INSTRUMENT

ON THE UNDERSTANDING THAT THIS DOCUMENT AND THE INFORMATION THEREON MAY NOT BE DISCLOSED WITH ANY MANNER EXCEPT FOR THE PURPOSES OF THIS INSTRUMENT OR AS OTHERWISE PERMITTED IN WRITING BY THE UNIVAC DIVISION OF SPERRY RAND CORPORATION

UNLESS OTHERWISE SPECIFIED
DIMENSION IN INCHES. TOLERANCE ON
2 PLACE DECIMALS ±
3 PLACE DECIMALS ±
ANGLES ±
HOLE DIAMETER TOLERANCE
0 THRU .250 +.003 −.002
.251 THRU .300 +.005 −.003
.301 & LARGER +.010 −.005
THREADS: EXT CL 2A, INT CL 2B
MATERIAL
FINISH
NEXT ASSY | EQUIPMENT
APPLICATION
COMMODITY CODE

		DATE
LAYOUT		
DRAFTSMAN	J. R. CURTIS	7-7-65
CHECKER	B. POPOV	11/15/65
ENGINEER	R. D. MCCUMBER	10-28-65
APPROVAL		10-25-65

CLASS A

UNIVAC
DIVISION OF SPERRY RAND CORPORATION

TITLE
FUNCTIONAL SCHEMATIC, CLOCK DISTRIBUTION, PHASE 3 AND 4

CODE IDENT NO.	SIZE	DWG NO.
90536	D	7030233

SCALE | WEIGHT | SHEET 1 OF 1

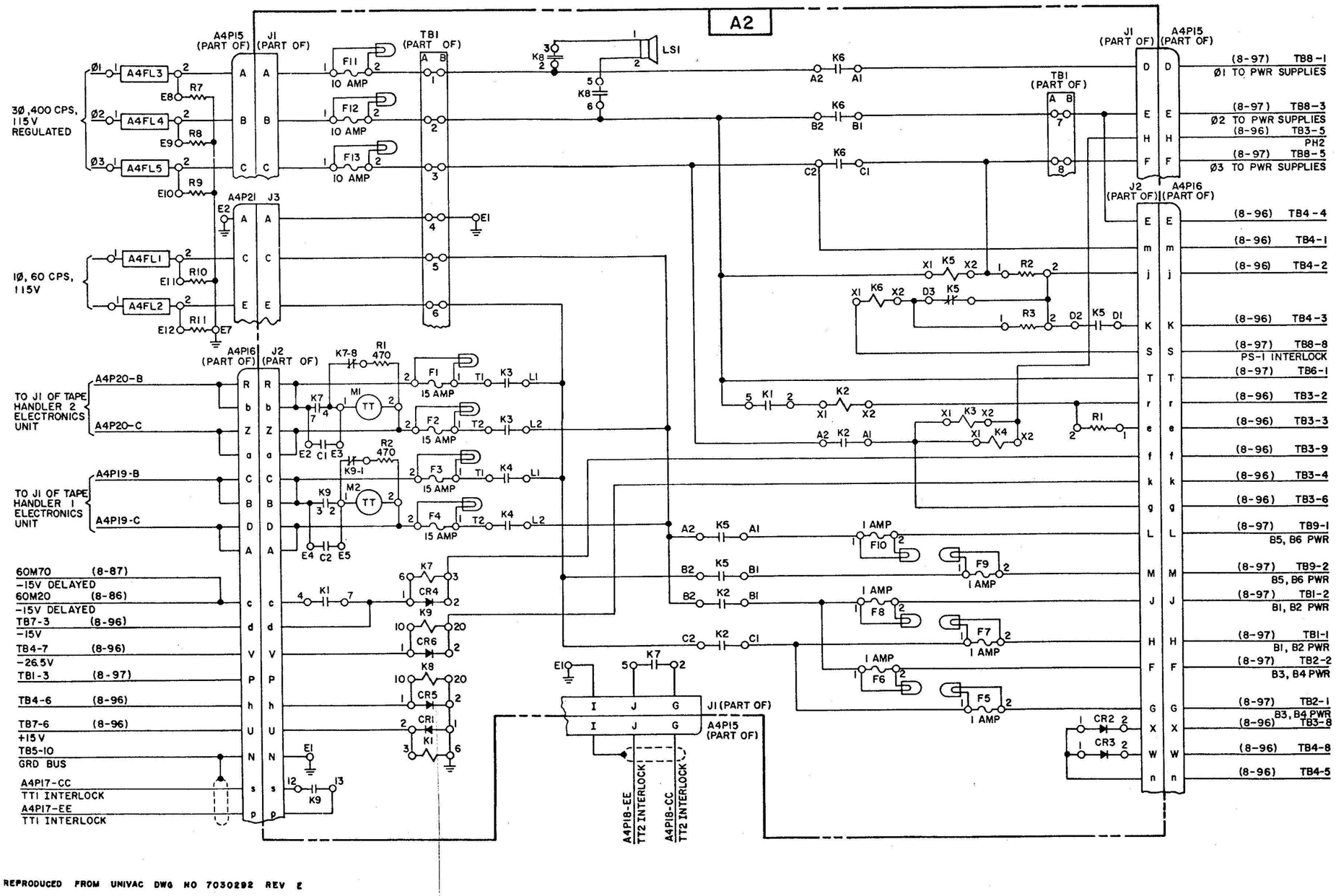

REPRODUCED FROM UNIVAC DWG NO 7030282 REV E

Figure 8-94. Basic Cabinet Power Control, 1540 Magnetic Tape Unit, Air-Cooled, Part 1, Wiring Schematic

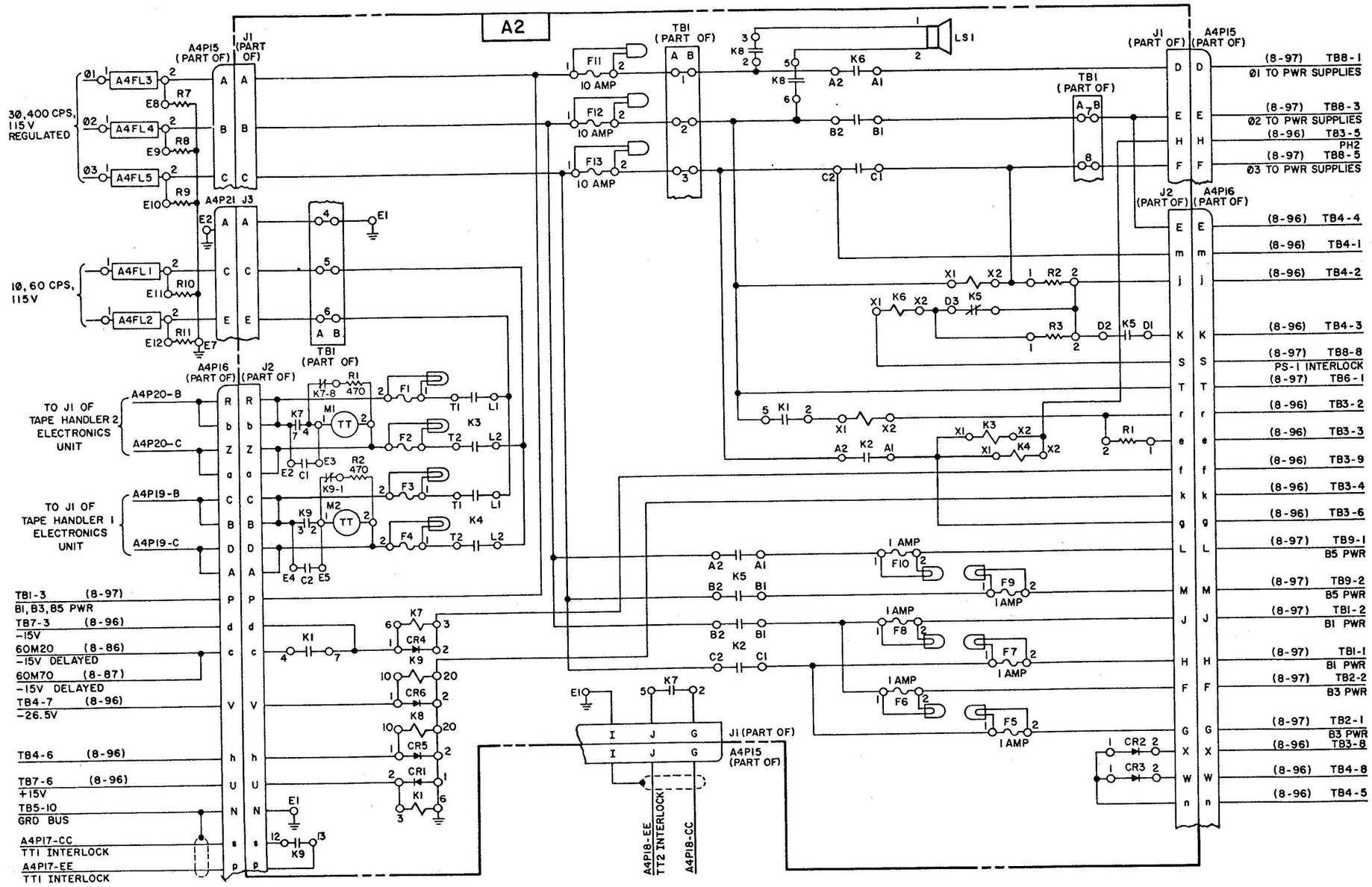

REPRODUCED FROM UNIVAC DWG NO 7030312 REV E

Figure 8-95. Basic Cabinet Power Control, 1540 Magnetic Tape Unit, Water-Cooled, Part 1, Wiring Schematic

REVISIONS						
SYM	ZONE	EIR	DESCRIPTION	DR	DATE	APPROVED
A		69699	SEE EIR	[illegible]	- - -	J.W.B.
B		77505	SEE EIR	[illegible]	4/22/66	J.W.B.

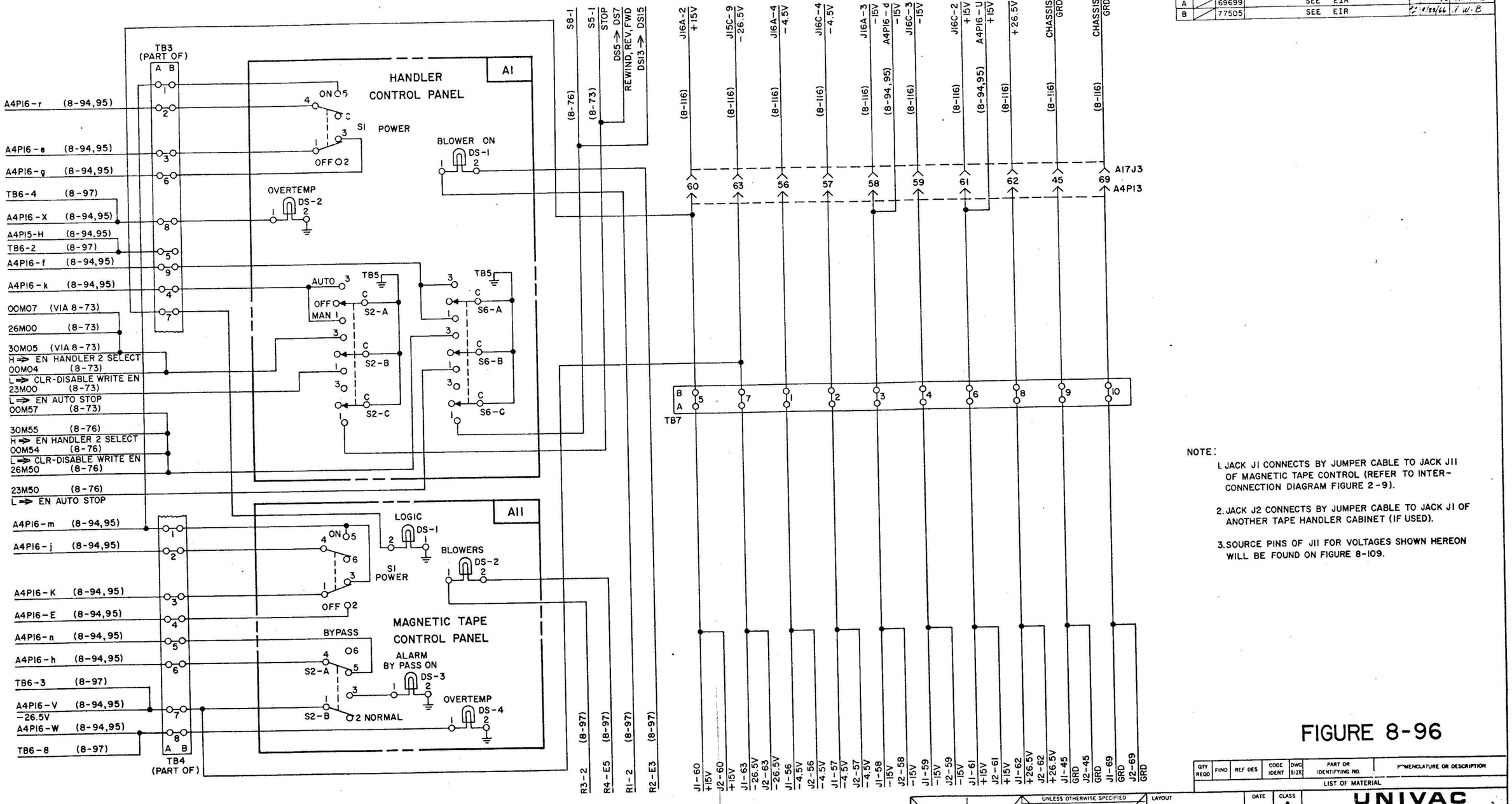

NOTE:

1. JACK J1 CONNECTS BY JUMPER CABLE TO JACK J11 OF MAGNETIC TAPE CONTROL (REFER TO INTER-CONNECTION DIAGRAM FIGURE 2-9).
2. JACK J2 CONNECTS BY JUMPER CABLE TO JACK J1 OF ANOTHER TAPE HANDLER CABINET (IF USED).
3. SOURCE PINS OF J11 FOR VOLTAGES SHOWN HEREON WILL BE FOUND ON FIGURE 8-109.

FIGURE 8-96

QTY REQD	FIND	REF DES	CODE IDENT	DWG SIZE	PART OR IDENTIFYING NO.	NOMENCLATURE OR DESCRIPTION

LIST OF MATERIAL

IDENT NO. 7030293-00

THIS DOCUMENT CONTAINS CONFIDENTIAL INFORMATION OF THE UNIVAC DIVISION OF SPERRY RAND CORPORATION AND IS FURNISHED PURSUANT TO THE FOLLOWING INSTRUMENT:

ON THE UNDERSTANDING THAT THIS DOCUMENT AND THE INFORMATION THEREON MAY NOT BE DEALT WITH IN ANY MANNER EXCEPT FOR THE PURPOSES OF THAT INSTRUMENT OR AS OTHERWISE PERMITTED IN WRITING BY THE UNIVAC DIVISION OF SPERRY RAND CORPORATION.

UNLESS OTHERWISE SPECIFIED
DIMENSION IN INCHES. TOLERANCE ON 2 PLACE DECIMALS ± | 3 PLACE DECIMALS ± | ANGLES ±
HOLE DIAMETER TOLERANCE
0 THRU 250 +.003 -.002 | 251 THRU .500 +.005 -.003 | .501 & LARGER +.010 -.005
THREADS: EXT CL 2A, INT CL 2B
MATERIAL
FINISH
NEXT ASSY | EQUIPMENT
APPLICATION
COMMODITY CODE

		DATE
LAYOUT		
DRAFTSMAN R. ANDERSON		10-22-65
CHECKER B. POPOV	BOB BP	11/15/65
ENGINEER R. BELJESKI	RBJ	11-15-65
APPROVAL K. Hendley		11/15/65

CLASS A

UNIVAC
DIVISION OF SPERRY RAND CORPORATION

TITLE
WIRING SCHEMATIC,
BASIC CABINET POWER CONTROL
1540 MAGNETIC TAPE UNIT PART 2

CODE IDENT NO.	SIZE	DWG NO.
90536	D	7030293

SCALE | WEIGHT | SHEET 1 OF 1

REVISIONS						
SYM	ZONE	EIR	DESCRIPTION	CHG	DATE	APPROVED
A		77122	SEE EIR		7-6-66	BJP
B		90255	SEE EIR		12-28-67	R.L.B.

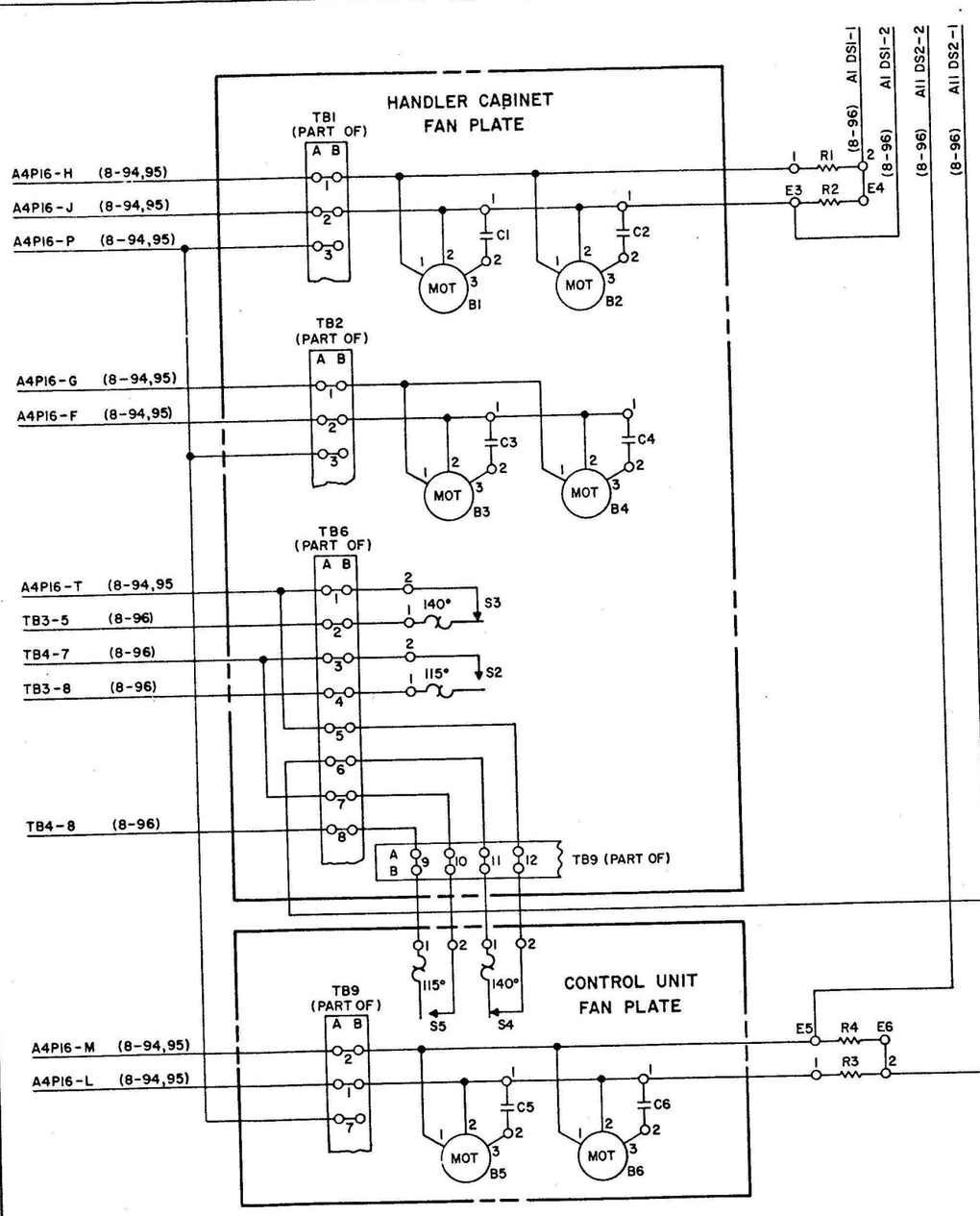

FIGURE 8-97

QTY REQD	FIND	REF DES	CODE IDENT	DWG SIZE	PART OR IDENTIFYING NO.	NOMENCLATURE OR DESCRIPTION
LIST OF MATERIAL						

IDENT NO. 7030303-00

THIS DOCUMENT CONTAINS CONFIDENTIAL INFORMATION OF THE UNIVAC DIVISION OF SPERRY RAND CORPORATION AND IS FURNISHED PURSUANT TO THE FOLLOWING INSTRUMENT:

ON THE UNDERSTANDING THAT THIS DOCUMENT AND THE INFORMATION THEREON MAY NOT BE DEALT WITH IN ANY MANNER EXCEPT FOR THE PURPOSES OF THAT INSTRUMENT OR AS OTHERWISE PERMITTED IN WRITING BY THE UNIVAC DIVISION OF SPERRY RAND CORPORATION

UNLESS OTHERWISE SPECIFIED
DIMENSION IN INCHES. TOLERANCE ON
2 PLACE DECIMALS ±
3 PLACE DECIMALS ±
ANGLES ±
HOLE DIAMETER TOLERANCE
0 THRU .250 +.003 −.002
.251 THRU .500 +.005 −.003
.501 & LARGER +.010 −.005
THREADS: EXT CL 2A, INT CL 2B
MATERIAL
FINISH
NEXT ASSY | EQUIPMENT
APPLICATION
COMMODITY CODE

		DATE
LAYOUT		
DRAFTSMAN R. ANDERSON		10-19-65
CHECKER B. POPOV	BP	11/5/65
ENGINEER R. BELJESKI	RJB	11-15-65
APPROVAL		11/5/65

CLASS A
UNIVAC
DIVISION OF SPERRY RAND CORPORATION

TITLE
WIRING SCHEMATIC,
BASIC CABINET POWER CONTROL
1540 MAGNETIC TAPE UNIT, PART 3

CODE IDENT NO.	SIZE	DWG NO.
90536	D	7030303

SCALE | WEIGHT | SHEET 1 OF 1

REVISIONS						
SYM	ZONE	EIR	DESCRIPTION	CHK	DATE	APPROVED
A		69697	SEE EIR		4-1-66	J.W.B.
B		77505	SEE EIR		6/22/66	J.W.B.
C		77490	SEE EIR		8-8-66	J.W.B.
D		77122	SEE EIR		12-2-66	BJP

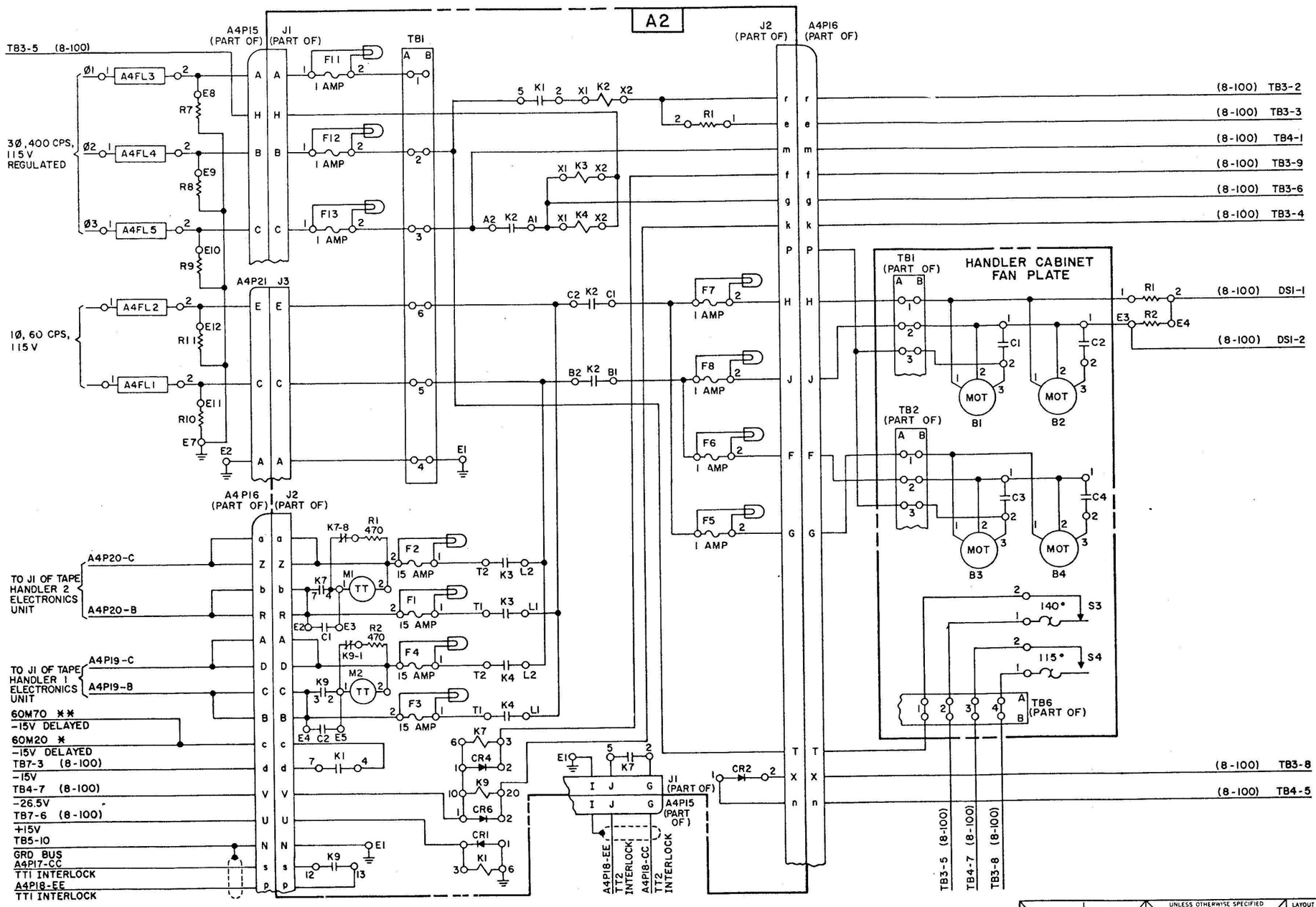

NOTE:
1. * IDENTICAL TO CIRCUIT SHOWN ON FIGURE 8-86.
2. ** IDENTICAL TO CIRCUIT SHOWN ON FIGURE 8-87.

FIGURE 8-98

QTY REQD	FIND	REF DES	CODE IDENT	DWG SIZE	PART OR IDENTIFYING NO.	NOMENCLATURE OR DESCRIPTION

LIST OF MATERIAL

IDENT NO. 7030313

THIS DOCUMENT CONTAINS CONFIDENTIAL INFORMATION OF THE UNIVAC DIVISION OF SPERRY RAND CORPORATION AND IS FURNISHED PURSUANT TO THE FOLLOWING INSTRUMENT:

ON THE UNDERSTANDING THAT THIS DOCUMENT AND THE INFORMATION THEREIN MAY NOT BE DEALT WITH IN ANY MANNER EXCEPT FOR THE PURPOSES OF THAT INSTRUMENT OR AS OTHERWISE PERMITTED IN WRITING BY THE UNIVAC DIVISION OF SPERRY RAND CORPORATION.

UNLESS OTHERWISE SPECIFIED
DIMENSION IN INCHES. TOLERANCE ON
2 PLACE DECIMALS ± | 3 PLACE DECIMALS ± | ANGLES ±
HOLE DIAMETER TOLERANCE
0 THRU .250 +.003 −.002 | .251 THRU .500 +.005 −.003 | .501 & LARGER +.010 −.005
THREADS: EXT CL 2A, INT CL 2B
MATERIAL
FINISH
NEXT ASSY | EQUIPMENT
APPLICATION
COMMODITY CODE

		DATE
LAYOUT		
DRAFTSMAN	D.C. WHEELER	11-4-65
CHECKER	B. POPOV	11-15-65
ENGINEER	R. BELJESKI	11-15-65
APPROVAL		11/15/65

CLASS A

UNIVAC
DIVISION OF SPERRY RAND CORPORATION

TITLE WIRING SCHEMATIC, ADD ON UNIT POWER CONTROL 1540 MAGNETIC TAPE UNIT AIRCOOLED, PART 1

CODE IDENT NO.	SIZE	DWG NO.
90536	D	7030313

SCALE | WEIGHT | SHEET 1 OF 1

REVISIONS						
SYM	ZONE	EIR	DESCRIPTION	CHK	DATE	APPROVED
A		69721	SEE EIR			J.W.C
B		77505	SEE EIR		4/22/66	J.W.C
C		77490	SEE EIR		8-66	J.W.C
D		77122	SEE EIR		2-4-66	

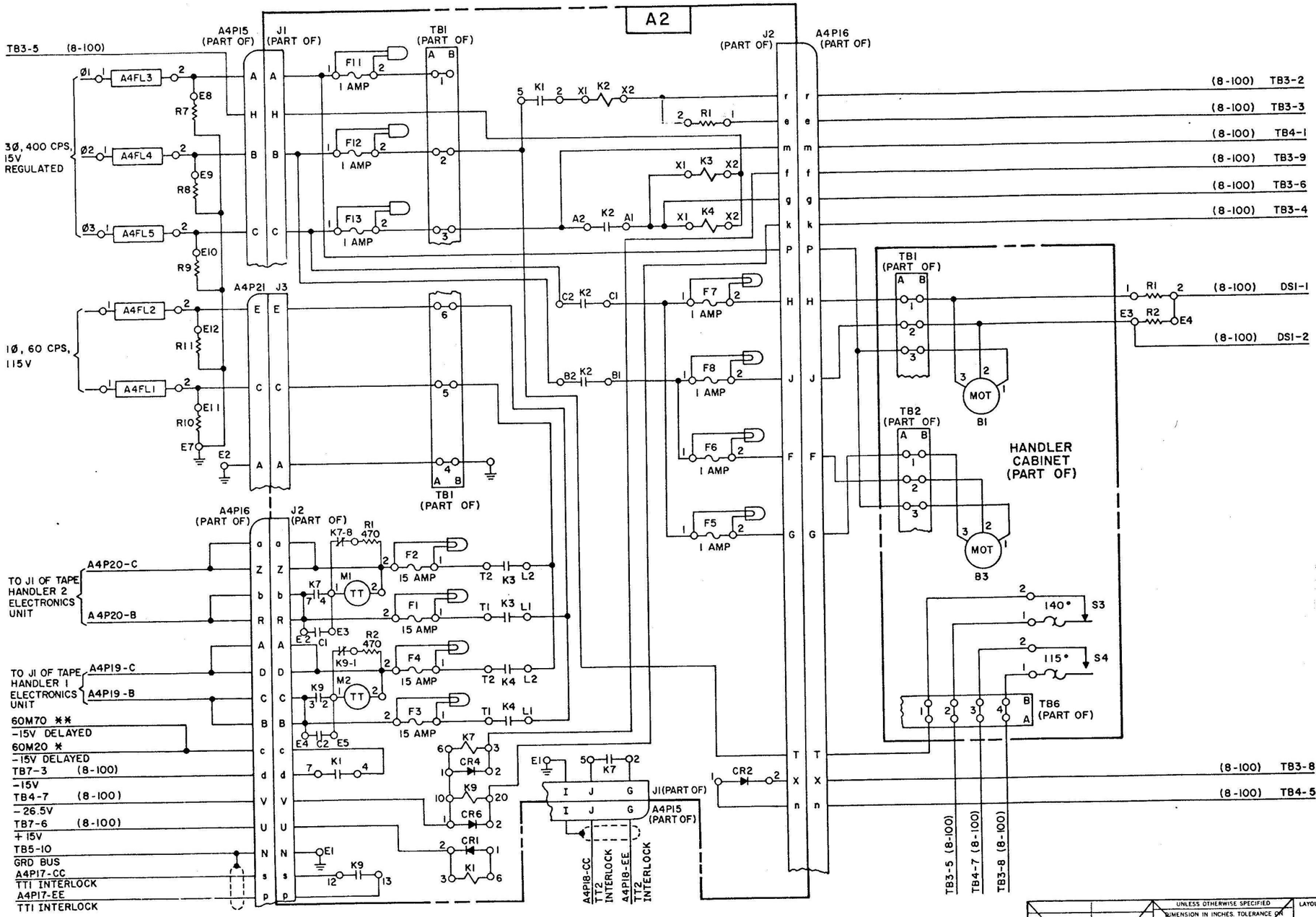

NOTE:
1. * IDENTICAL TO CIRCUIT SHOWN ON FIGURE 8-86.
2. ** IDENTICAL TO CIRCUIT SHOWN ON FIGURE 8-87.

FIGURE 8-99

QTY REQD	FIND	REF DES	CODE IDENT	DWG SIZE	PART OR IDENTIFYING NO.	NOMENCLATURE OR DESCRIPTION

LIST OF MATERIAL

IDENT NO. 7030314-00

THIS DOCUMENT CONTAINS CONFIDENTIAL INFORMATION OF THE UNIVAC DIVISION OF SPERRY RAND CORPORATION AND IS FURNISHED PURSUANT TO THE FOLLOWING INSTRUMENT:

ON THE UNDERSTANDING THAT THIS DOCUMENT AND THE INFORMATION THEREON MAY NOT BE DEALT WITH IN ANY MANNER EXCEPT FOR THE PURPOSES OF THAT INSTRUMENT OR AS OTHERWISE PERMITTED IN WRITING BY THE UNIVAC DIVISION OF SPERRY RAND CORPORATION

UNLESS OTHERWISE SPECIFIED
DIMENSION IN INCHES. TOLERANCE ON 2 PLACE DECIMALS ± | 3 PLACE DECIMALS ± | ANGLES ±
HOLE DIAMETER TOLERANCE
0 THRU .250 +.003 −.002 | .251 THRU .500 +.005 −.003 | .501 & LARGER +.010 −.005
THREADS: EXT CL 2A, INT CL 2B
MATERIAL
FINISH
NEXT ASSY | EQUIPMENT
APPLICATION
COMMODITY CODE

LAYOUT
DRAFTSMAN D.C. WHEELER — DATE 11-4-65
CHECKER B. POPOV — DATE 11/15/65
ENGINEER R. BELJESKI — DATE 11-15-65
APPROVAL — DATE 11/15/65

CLASS A

UNIVAC
DIVISION OF SPERRY RAND CORPORATION

TITLE
WIRING SCHEMATIC, ADD ON UNIT POWER CONTROL 1540 MAGNETIC TAPE UNIT WATERCOOLED, PART 1

CODE IDENT NO. 90536 | SIZE D | DWG NO. 7030314

SCALE | WEIGHT | SHEET 1 OF 1

REVISIONS						
SYM	ZONE	EIR	DESCRIPTION	CHK	DATE	APPROVED
A		69699	SEE EIR			
B		77505	SEE EIR		4/12/66	

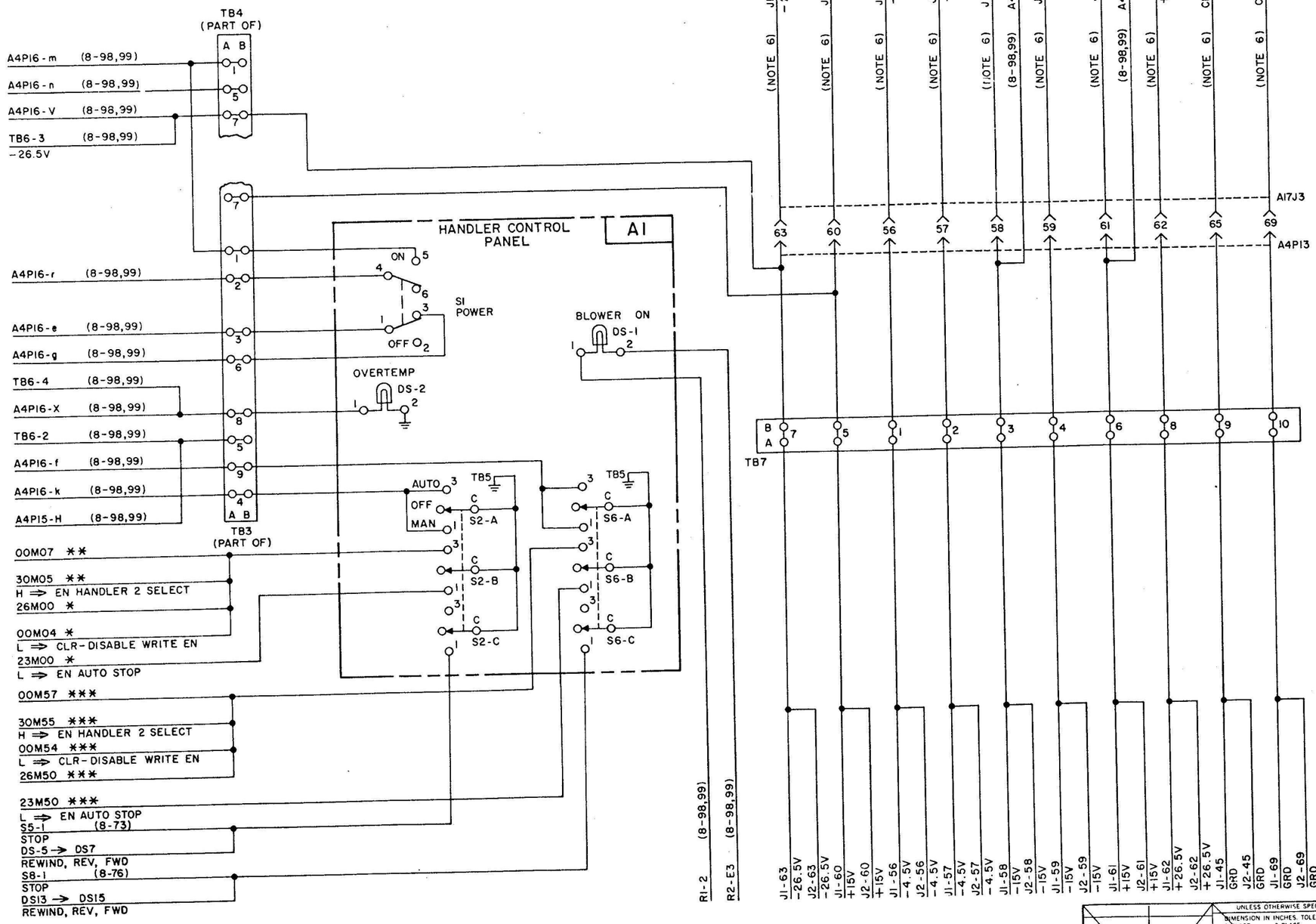

NOTE:

1. JACK J1 CONNECTS BY JUMPER CABLE TO JACK J2 OF BASIC UNIT OR OF ANOTHER ADD ON UNIT, OR TO JACK J12 OF BASIC UNIT (REFER TO INTERCONNECTION DIAGRAM FIGURE 2-9).
2. JACK J2 CONNECTS BY JUMPER CABLE TO JACK J1 OF ANOTHER TAPE HANDLER CABINET (IF USED)(REFER TO INTERCONNECTION DIAGRAM FIGURE 2-9)
3. * IDENTICAL TO CIRCUITS ON FIGURE 8-73.
4. ** IDENTICAL TO CIRCUITS ON FIGURE 8-74.
5. *** IDENTICAL TO CIRCUITS ON FIGURE 8-76.
6. TO CHASSIS A17 IDENTICAL TO FIGURE 8-116.
7. SOURCE PINS OF J11 FOR VOLTAGES SHOWN HEREON ARE THE SAME AS THOSE SHOWN ON FIGURE 8-109.

FIGURE 8-100

QTY REQD	FIND	REF DES	CODE IDENT	DWG SIZE	PART OR IDENTIFYING NO.	NOMENCLATURE OR DESCRIPTION

LIST OF MATERIAL

IDENT NO. 7030315-00

THIS DOCUMENT CONTAINS CONFIDENTIAL INFORMATION OF THE UNIVAC DIVISION OF SPERRY RAND CORPORATION AND IS FURNISHED PURSUANT TO THE FOLLOWING INSTRUMENT:

ON THE UNDERSTANDING THAT THIS DOCUMENT AND THE INFORMATION THEREIN MAY NOT BE DEALT WITH IN ANY MANNER EXCEPT FOR THE PURPOSES OF THAT INSTRUMENT OR AS OTHERWISE PERMITTED IN WRITING BY THE UNIVAC DIVISION OF SPERRY RAND CORPORATION.

UNLESS OTHERWISE SPECIFIED
DIMENSION IN INCHES. TOLERANCE ON 2 PLACE DECIMALS ± | 3 PLACE DECIMALS ± | ANGLES ±
HOLE DIAMETER TOLERANCE: 0 THRU .250 +.003 −.002 | .251 THRU .500 +.005 −.003 | .501 & LARGER +.010 −.005
THREADS: EXT CL 2A, INT CL 2B
MATERIAL
NEXT ASSY | EQUIPMENT
APPLICATION
COMMODITY CODE
FINISH

		DATE
LAYOUT		
DRAFTSMAN	R. M. BECKMAN	11-4-65
CHECKER	B. POPOV	11-15-65
ENGINEER	R. BELJESKI	11-15-65
APPROVAL		11/15/65

CLASS A

UNIVAC
DIVISION OF SPERRY RAND CORPORATION

TITLE
WIRING SCHEMATIC,
ADD ON UNIT POWER CONTROL
1540 MAGNETIC TAPE UNIT, PART 2

CODE IDENT NO.	SIZE	DWG NO.
90536	D	7030315

SCALE | WEIGHT | SHEET 1 OF 1

REVISIONS						
SYM	ZONE	EIR	DESCRIPTION	CHK	DATE	APPROVED
A		69721	SEE EIR			A.W.B.
B		77156	SEE EIR			
C		91316	SEE EIR			
D		100441	SEE EIR			

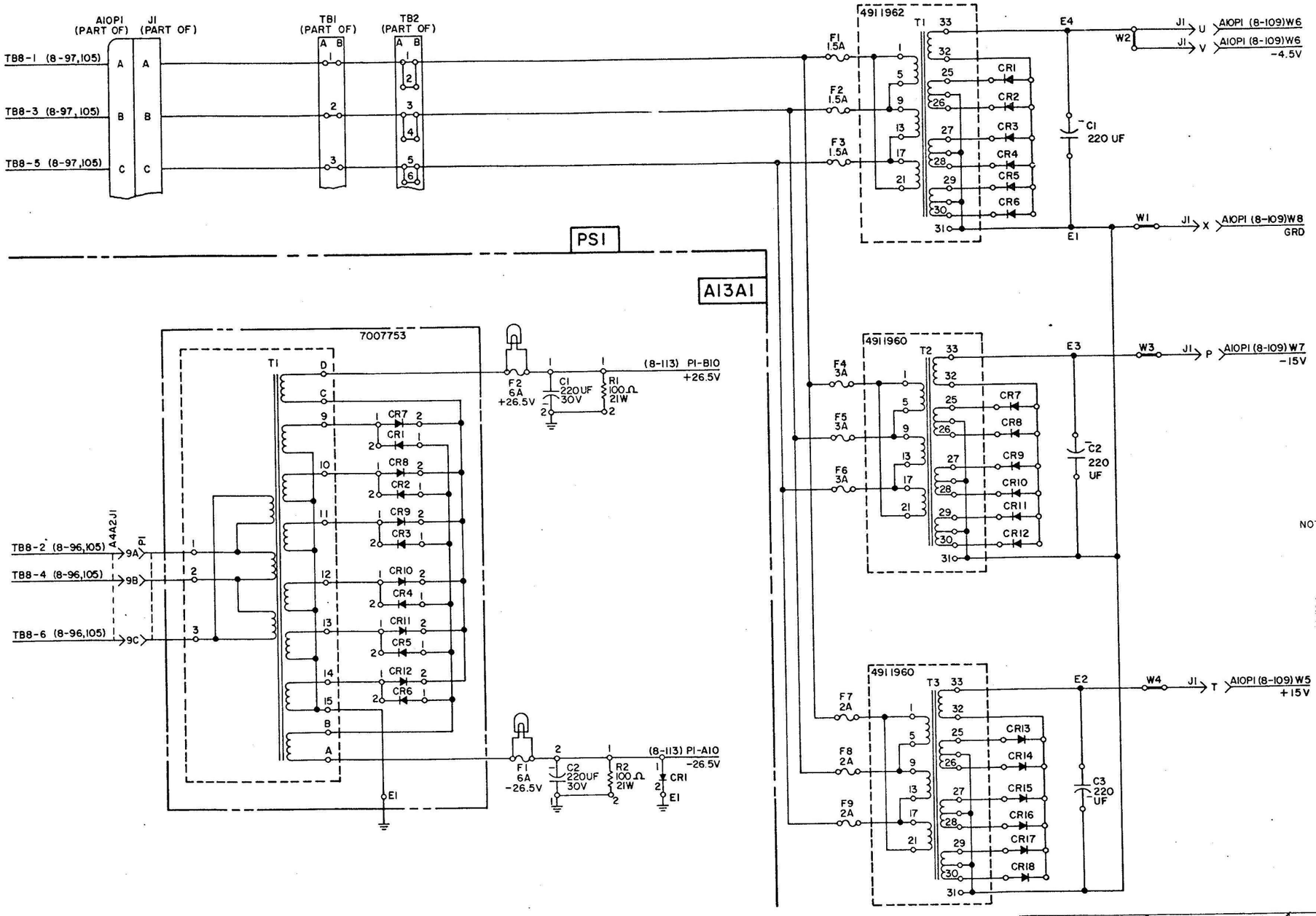

NOTE:

1. INPUT CONNECTIONS TO PRIMARY TAPS OF TRANSFORMERS T1, T2, AND T3 MAY BE VARIED TO PRODUCE THE REQUIRED OUTPUT VOLTAGE.

FIGURE 8-101

QTY REQD	FIND	REF DES	CODE IDENT	DWG SIZE	PART OR IDENTIFYING NO.	NOMENCLATURE OR DESCRIPTION

LIST OF MATERIAL

IDENT NO. 7030295-00

UNIVAC
DIVISION OF SPERRY RAND CORPORATION

TITLE FUNCTIONAL SCHEMATIC, 1540/1541 POWER SUPPLIES PS-1 & LOGIC MAGNETIC TAPE UNIT

LAYOUT		DATE
DRAFTSMAN R. ANDERSON		10-26-65
CHECKER B. POPOV	BP	11/4/65
ENGINEER R. BELJESKI		11-5-65
APPROVAL R. Hensley		11/4/65

CLASS A

CODE IDENT NO. 90536 | SIZE D | DWG NO. 7030295

SCALE | WEIGHT | SHEET 1 OF 1

REVISIONS						
SYM	ZONE	EIR	DESCRIPTION	CHK	DATE	APPROVED

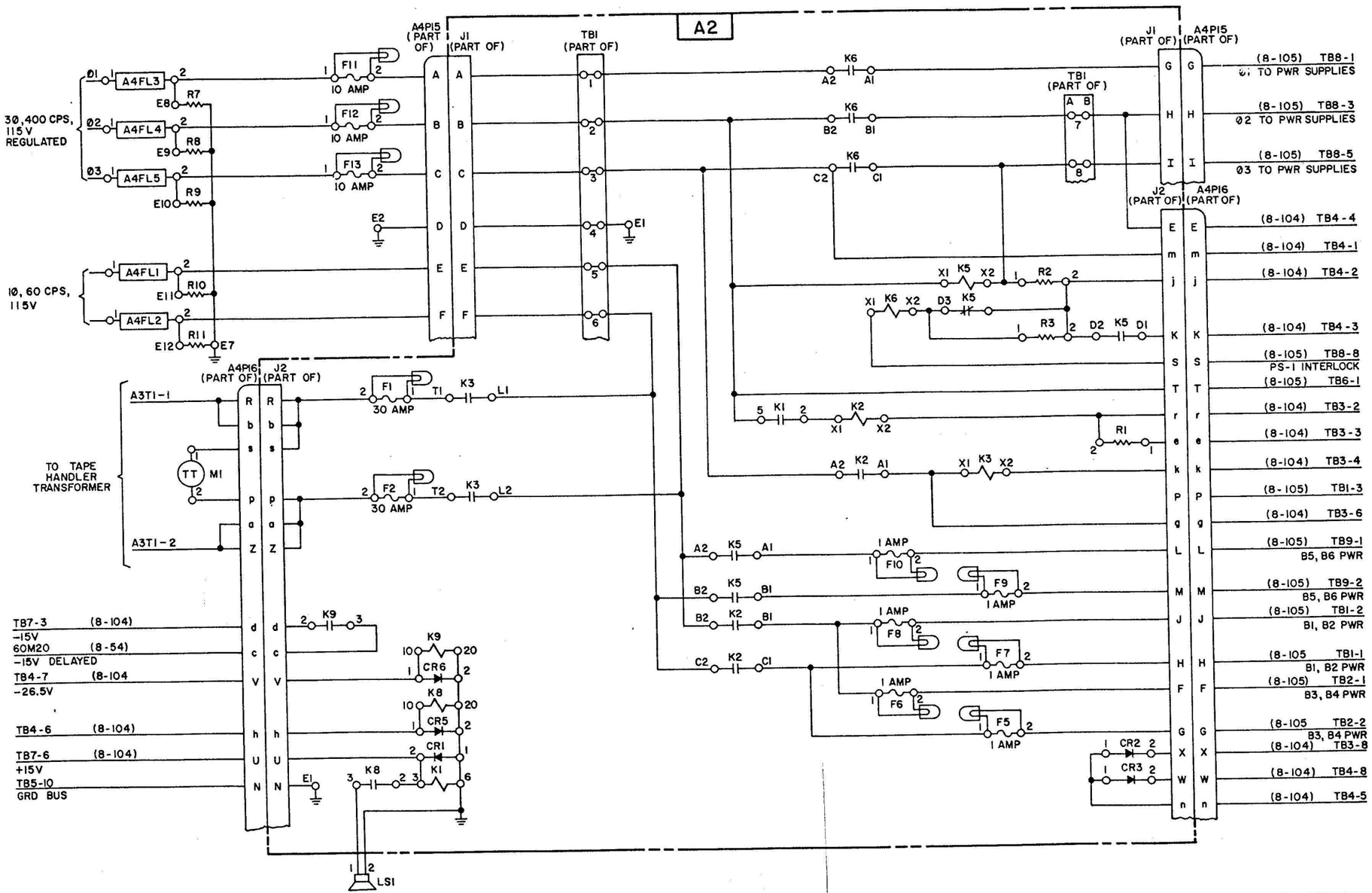

FIGURE 8-102

QTY REQD	FIND	REF DES	CODE IDENT	DWG SIZE	PART OR IDENTIFYING NO.	NOMENCLATURE OR DESCRIPTION

LIST OF MATERIAL

IDENT NO. 7030319-00

THIS DOCUMENT CONTAINS CONFIDENTIAL INFORMATION OF THE UNIVAC DIVISION OF SPERRY RAND CORPORATION AND IS FURNISHED PURSUANT TO THE FOLLOWING INSTRUMENT.

ON THE UNDERSTANDING THAT THIS DOCUMENT AND THE INFORMATION THEREON MAY NOT BE DEALT WITH IN ANY MANNER EXCEPT FOR THE PURPOSES OF THAT INSTRUMENT OR AS OTHERWISE PERMITTED IN WRITING BY THE UNIVAC DIVISION OF SPERRY RAND CORPORATION

UNLESS OTHERWISE SPECIFIED
DIMENSION IN INCHES TOLERANCE ON
2 PLACE DECIMALS ±
3 PLACE DECIMALS ±
ANGLES ±
HOLE DIAMETER TOLERANCE
.0 THRU .250 +.003 −.002
.251 THRU .500 +.005 −.005
.501 & LARGER +.010 −.005
THREADS EXT CL 2A, INT CL 2B
MATERIAL
FINISH
NEXT ASSY
EQUIPMENT
APPLICATION
COMMODITY CODE

LAYOUT		DATE
DRAFTSMAN	R. M. BECKMAN	11-8-65
CHECKER	B. POPOV	11/15/65
ENGINEER	R. BELJESKI	11-15-65
APPROVAL		11/15/65

CLASS A

UNIVAC
DIVISION OF SPERRY RAND CORPORATION

TITLE
WIRING SCHEMATIC,
BASIC CABINET POWER CONTROL
1541 MAGNETIC TAPE UNIT
AIRCOOLED, PART 1

CODE IDENT NO.	SIZE	DWG NO.
90536	D	7030319

SCALE | WEIGHT | SHEET 1 OF 1

REVISIONS						
SYM	ZONE	EIR	DESCRIPTION	DIR	DATE	APPROVED

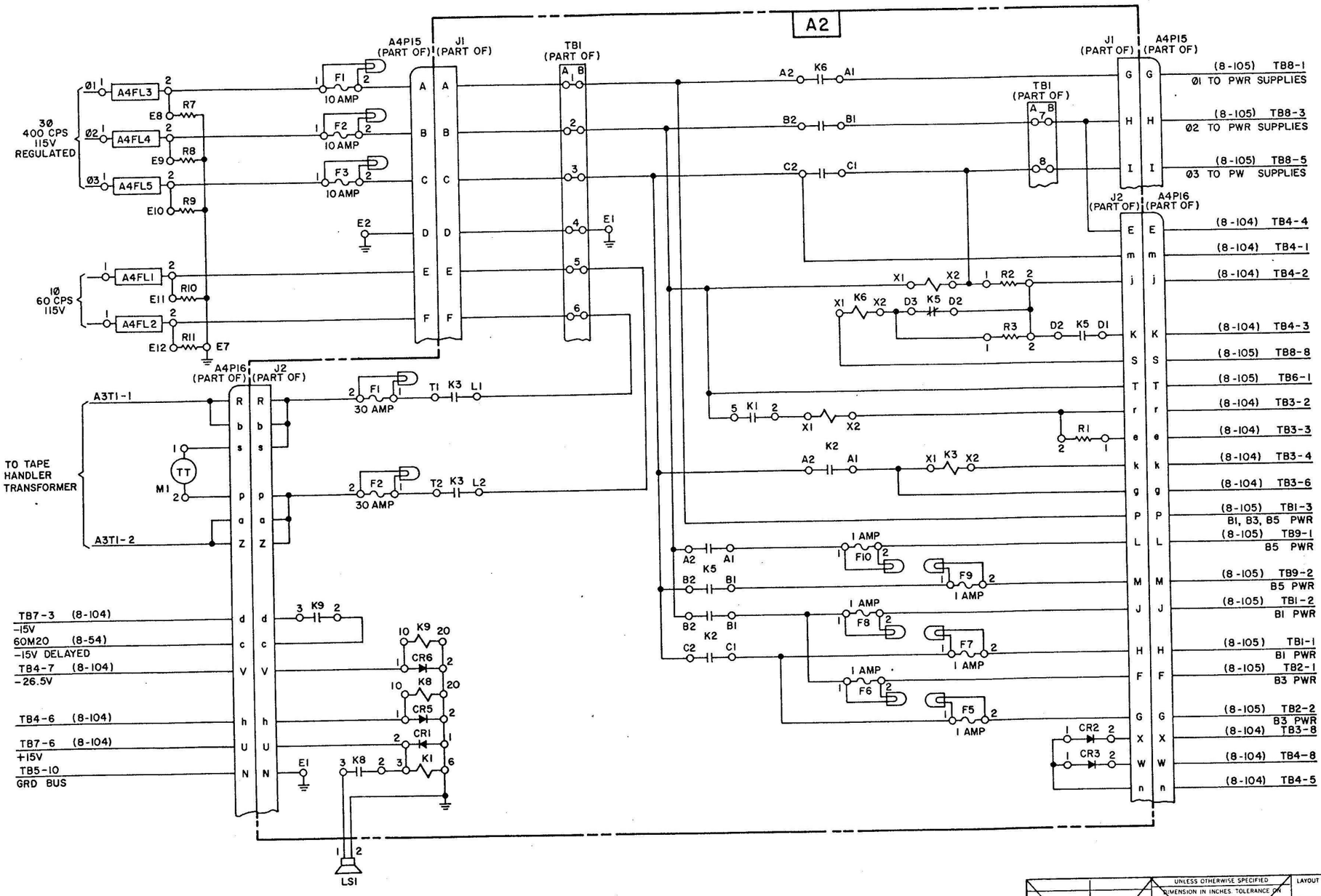

FIGURE 8-103

QTY REQD	FIND	REF DES	CODE IDENT	DWG SIZE	PART OR IDENTIFYING NO.	NOMENCLATURE OR DESCRIPTION

LIST OF MATERIAL

IDENT NO. 7030320-00

THIS DOCUMENT CONTAINS CONFIDENTIAL INFORMATION OF THE UNIVAC DIVISION OF SPERRY RAND CORPORATION AND IS FURNISHED PURSUANT TO THE FOLLOWING INSTRUMENT:

ON THE UNDERSTANDING THAT THIS DOCUMENT AND THE INFORMATION THEREON MAY NOT BE DEALT WITH IN ANY MANNER EXCEPT FOR THE PURPOSES SPECIFIED IN SUCH INSTRUMENT OR AS OTHERWISE PERMITTED IN WRITING BY THE UNIVAC DIVISION OF SPERRY RAND CORPORATION.

UNLESS OTHERWISE SPECIFIED
DIMENSION IN INCHES. TOLERANCE ON
2 PLACE DECIMALS ± | 3 PLACE DECIMALS ± | ANGLES ±
HOLE DIAMETER TOLERANCE
0 THRU .250 +.003 −.002 | .251 THRU .500 +.005 −.003 | .501 & LARGER +.010 −.005
THREADS EXT CL 2A, INT CL 2B
MATERIAL
FINISH
NEXT ASSY | EQUIPMENT
APPLICATION
COMMODITY CODE

		DATE
LAYOUT		
DRAFTSMAN	D. STATTS	10-8-65
CHECKER	B. POPOV	11/15/65
ENGINEER	R. BELJESKI	11-15-65
APPROVAL		11/19/65

CLASS A

UNIVAC
DIVISION OF SPERRY RAND CORPORATION

TITLE WIRING SCHEMATIC, BASIC CABINET POWER CONTROL 1541 MAGNETIC UNIT WATERCOOLED, PART 1

CODE IDENT NO.	SIZE	DWG NO.
90536	D.	7030320

SCALE | WEIGHT | SHEET 1 OF 1

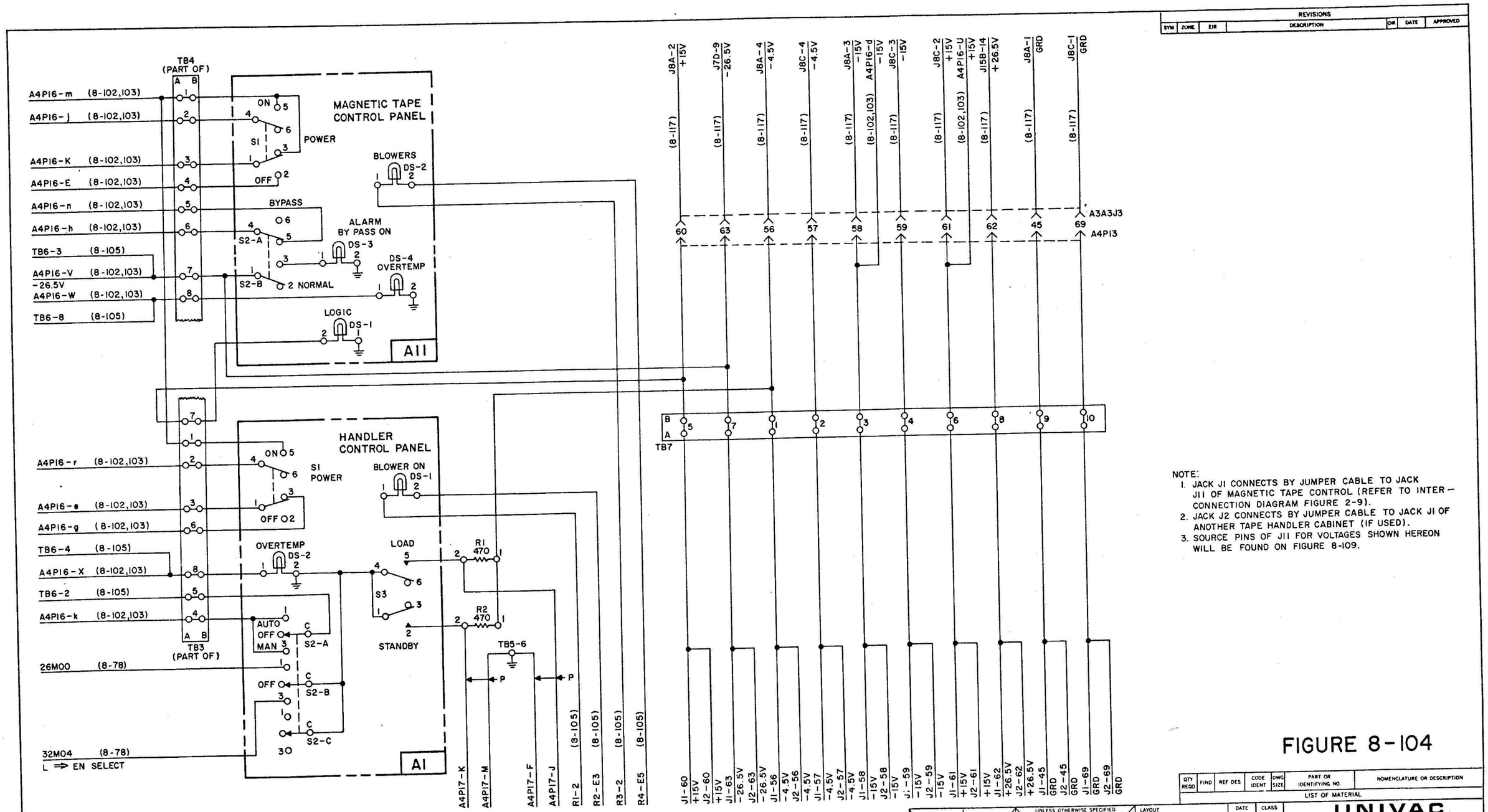

REVISIONS						
SYM	ZONE	EIR	DESCRIPTION	CHK	DATE	APPROVED

NOTE:
1. JACK J1 CONNECTS BY JUMPER CABLE TO JACK J11 OF MAGNETIC TAPE CONTROL (REFER TO INTER-CONNECTION DIAGRAM FIGURE 2-9).
2. JACK J2 CONNECTS BY JUMPER CABLE TO JACK J1 OF ANOTHER TAPE HANDLER CABINET (IF USED).
3. SOURCE PINS OF J11 FOR VOLTAGES SHOWN HEREON WILL BE FOUND ON FIGURE 8-109.

FIGURE 8-104

QTY REQD	FIND	REF DES	CODE IDENT	DWG SIZE	PART OR IDENTIFYING NO.	NOMENCLATURE OR DESCRIPTION

LIST OF MATERIAL

IDENT NO. 7030322-00

THIS DOCUMENT CONTAINS CONFIDENTIAL INFORMATION OF THE UNIVAC DIVISION OF SPERRY RAND CORPORATION AND IS FURNISHED PURSUANT TO THE FOLLOWING INSTRUMENT:

ON THE UNDERSTANDING THAT THIS DOCUMENT AND THE INFORMATION THEREON MAY NOT BE DEALT WITH IN ANY MANNER EXCEPT FOR THE PURPOSES OF THAT INSTRUMENT OR AS OTHERWISE PERMITTED IN WRITING BY THE UNIVAC DIVISION OF SPERRY RAND CORPORATION.

UNLESS OTHERWISE SPECIFIED
DIMENSION IN INCHES TOLERANCE ON
2 PLACE DECIMALS ± | 3 PLACE DECIMALS ± | ANGLES ±
HOLE DIAMETER TOLERANCE
0 THRU 250 +.003 −.002 | .251 THRU .500 +.005 −.003 | .501 & LARGER +.010 −.005
THREADS EXT CL 2A, INT CL 2B
MATERIAL
FINISH
NEXT ASSY | EQUIPMENT
APPLICATION
COMMODITY CODE

LAYOUT		DATE
DRAFTSMAN	D. STATTS	11-11-65
CHECKER	B. POPOV	11/15/65
ENGINEER	R. BELJESKI	11-15-65
APPROVAL		11/15/65

UNIVAC
DIVISION OF SPERRY RAND CORPORATION

CLASS: A

TITLE: WIRING SCHEMATIC, BASIC CABINET POWER CONTROL 1541 MAGNETIC TAPE UNIT, PART 2

CODE IDENT NO.	SIZE	DWG NO.
90536	D	7030322

SCALE | WEIGHT | SHEET 1 OF 1

REVISIONS						
SYM	ZONE	EIR	DESCRIPTION	CHG	DATE	APPROVED

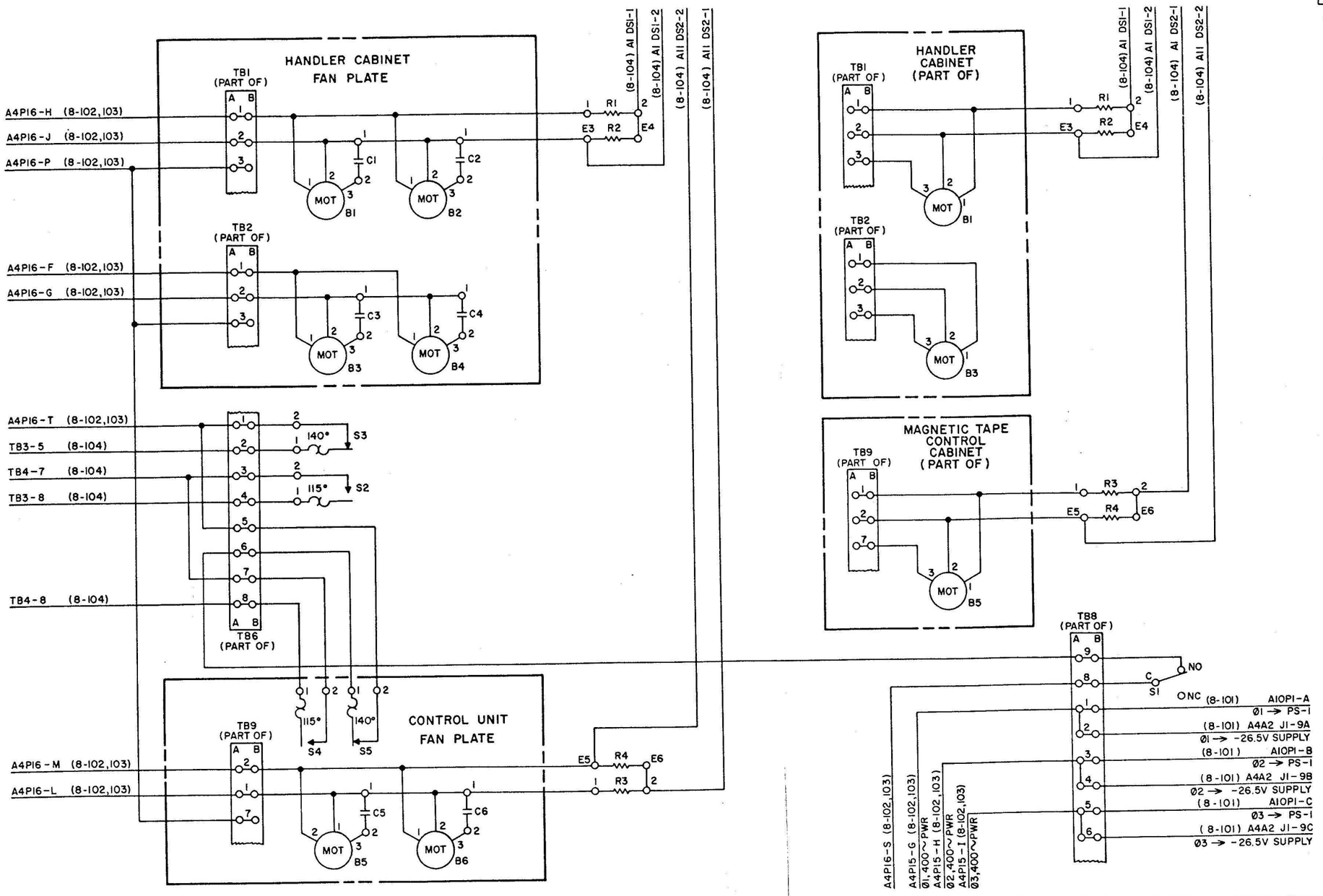

FIGURE 8-105

QTY REQD	FIND	REF DES	CODE IDENT	DWG SIZE	PART OR IDENTIFYING NO.	NOMENCLATURE OR DESCRIPTION

LIST OF MATERIAL

IDENT NO. 7030321-00

THIS DOCUMENT CONTAINS CONFIDENTIAL INFORMATION OF THE UNIVAC DIVISION OF SPERRY RAND CORPORATION AND IS FURNISHED PURSUANT TO THE FOLLOWING RESTRICTIVE AGREEMENT:

BY THE ACCEPTANCE OF THIS DOCUMENT AND THE INFORMATION CONTAINED HEREIN, IT IS AGREED THAT NEITHER THIS DOCUMENT NOR THE INFORMATION CONTAINED HEREIN WILL BE DISCLOSED TO ANY OTHER PARTY OR USED FOR ANY PURPOSE OTHER THAN THAT FOR WHICH IT IS FURNISHED WITHOUT THE EXPRESS WRITTEN PERMISSION OF THE UNIVAC DIVISION OF SPERRY RAND CORPORATION.

UNLESS OTHERWISE SPECIFIED
DIMENSION IN INCHES TOLERANCE ON
2 PLACE DECIMALS ±
3 PLACE DECIMALS ±
ANGLES ±
HOLE DIAMETER TOLERANCE
0 THRU 250 +.003 −.002
251 THRU 500 +.005 −.003
501 & LARGER +.010 −.005
THREADS EXT CL 2A, INT CL 2B
MATERIAL
FINISH
NEXT ASSY
EQUIPMENT
APPLICATION
COMMODITY CODE

LAYOUT		DATE
DRAFTSMAN D. STATTS		10-10-65
CHECKER B. POPOV	BPP	11/15/65
ENGINEER R. BELJESKI	RBB	11-15-65
APPROVAL		11/15/65

CLASS A

UNIVAC
DIVISION OF SPERRY RAND CORPORATION

TITLE
WIRING SCHEMATIC,
BASIC CABINET POWER CONTROL
1541 MAGNETIC TAPE UNIT, PART 3

CODE IDENT NO.	SIZE	DWG NO.
90536	D	7030321

SCALE | WEIGHT | SHEET 1 OF 1

REVISIONS						
SYM	ZONE	EIR	DESCRIPTION	OB	DATE	APPROVED

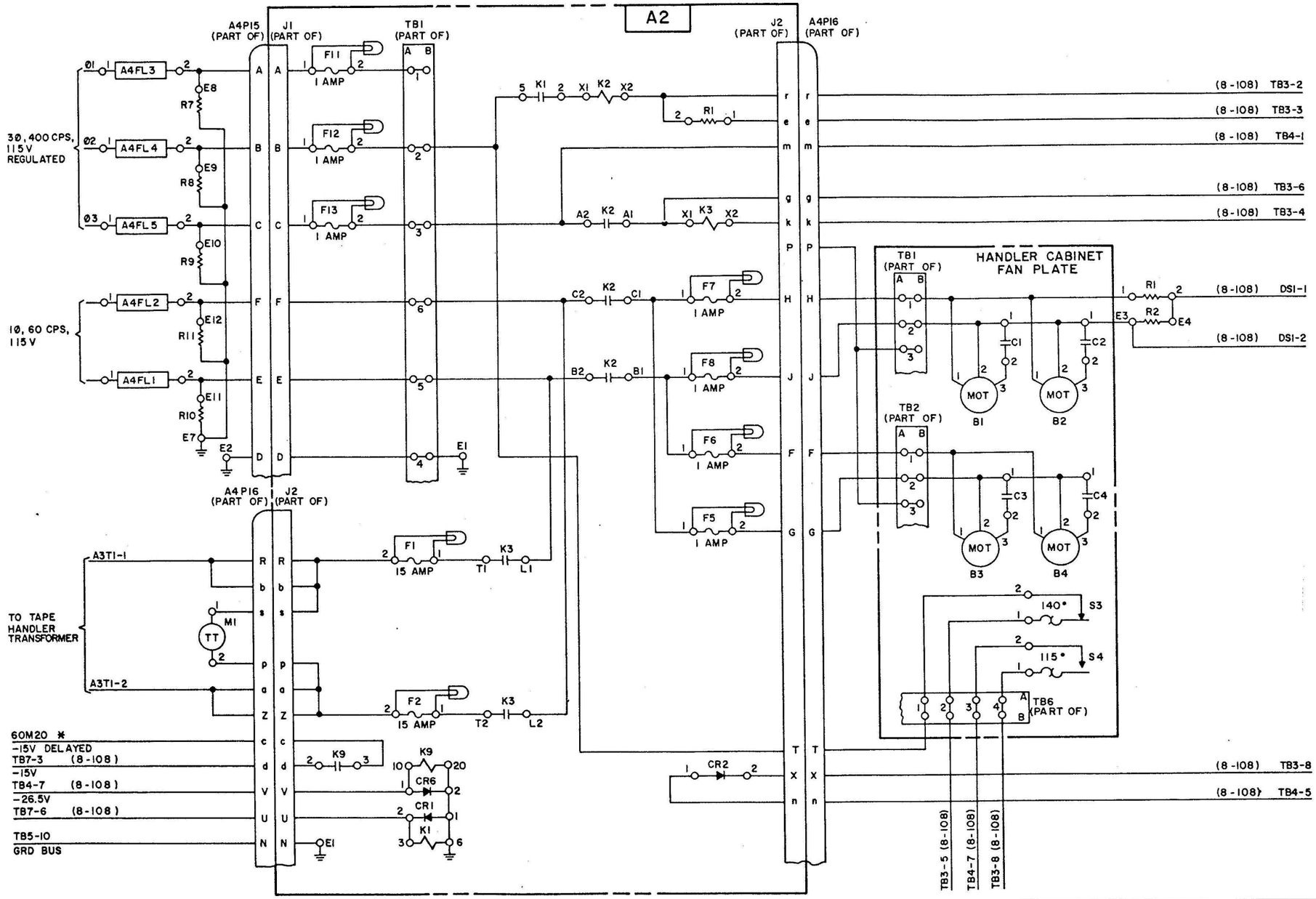

NOTE:
1. * IDENTICAL TO CIRCUIT SHOWN ON FIGURE 8-54.

FIGURE 8-106

QTY REQD	FIND	REF DES	CODE IDENT	DWG SIZE	PART OR IDENTIFYING NO.	NOMENCLATURE OR DESCRIPTION

LIST OF MATERIAL

IDENT NO. 7030317-00

THIS DOCUMENT CONTAINS CONFIDENTIAL INFORMATION OF THE UNIVAC DIVISION OF SPERRY RAND CORPORATION AND IS FURNISHED PURSUANT TO THE FOLLOWING INSTRUMENT:

ON THE UNDERSTANDING THAT THIS DOCUMENT AND THE INFORMATION THEREON MAY NOT BE DEALT WITH IN ANY MANNER EXCEPT FOR THE PURPOSES OF THAT INSTRUMENT OR AS OTHERWISE PERMITTED IN WRITING BY THE UNIVAC DIVISION OF SPERRY RAND CORPORATION

UNLESS OTHERWISE SPECIFIED
DIMENSION IN INCHES. TOLERANCE ON
2 PLACE DECIMALS ± .1 | 3 PLACE DECIMALS ± .03 | ANGLES ±
HOLE DIAMETER TOLERANCE
0 THRU 250 +.003 −.002 | 251 THRU 500 +.005 −.005 | 501 & LARGER +.010 −.005
THREADS: EXT CL 2A, INT CL 2B
MATERIAL
FINISH
NEXT ASSY | EQUIPMENT
APPLICATION
COMMODITY CODE

LAYOUT		DATE
DRAFTSMAN D.C. WHEELER		11-9-65
CHECKER B. POPOV	BP	11/15/65
ENGINEER R. BELJESKI	RJB	11-15-65
APPROVAL		11/16/65

CLASS A

UNIVAC
DIVISION OF SPERRY RAND CORPORATION

TITLE WIRING SCHEMATIC, ADD ON UNIT POWER CONTROL 1541 MAGNETIC TAPE UNIT AIRCOOLED, PART 1

CODE IDENT NO.	SIZE	DWG NO.
90536	D	7030317

SCALE | WEIGHT | SHEET 1 OF 1

REVISIONS						
SYM	ZONE	EIR	DESCRIPTION	CHK	DATE	APPROVED

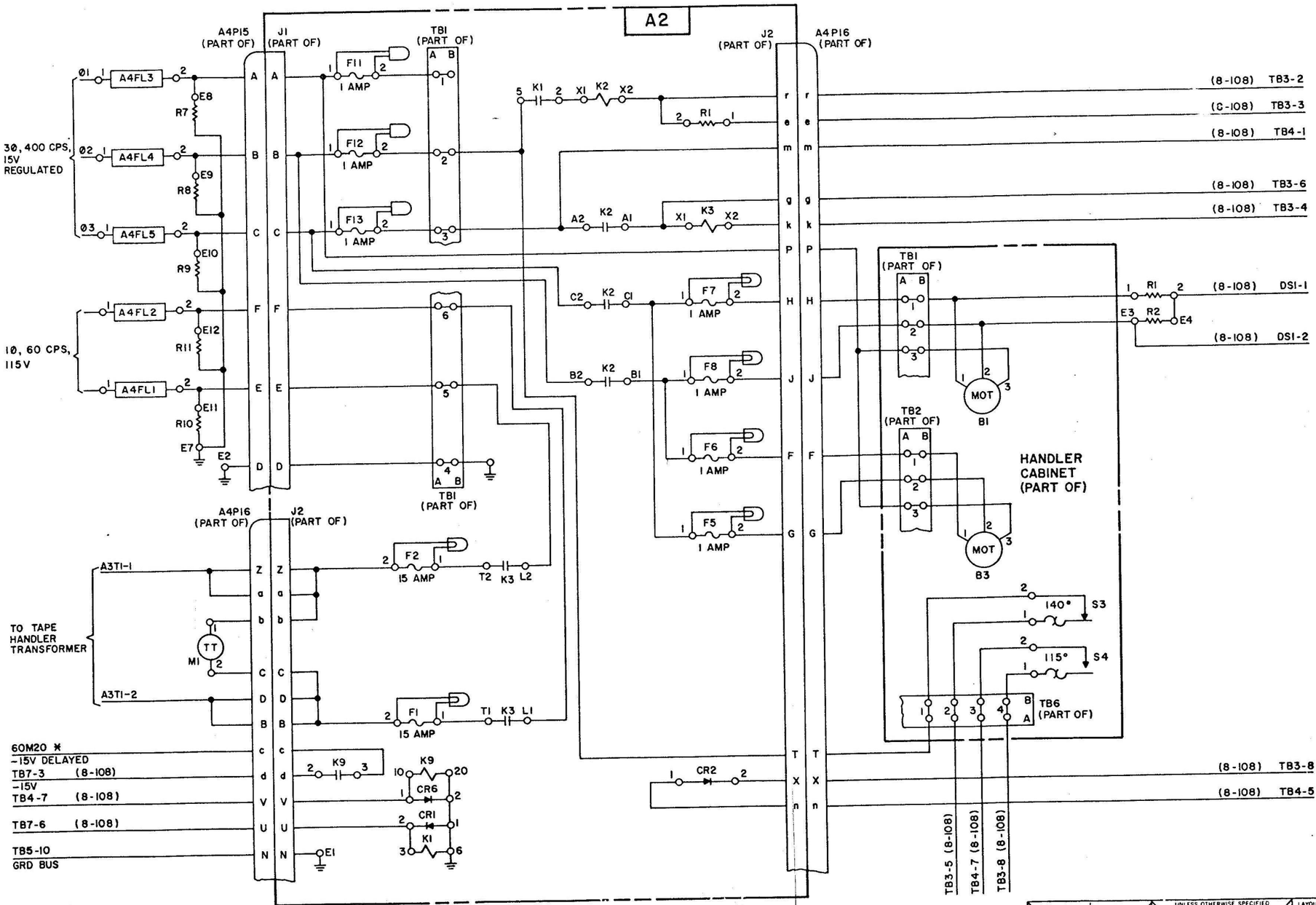

NOTE:
1. * IDENTICAL TO CIRCUIT SHOWN ON FIGURE 8-54.

FIGURE 8-107

QTY REQD	FIND	REF DES	CODE IDENT	DWG SIZE	PART OR IDENTIFYING NO.	NOMENCLATURE OR DESCRIPTION

LIST OF MATERIAL

IDENT NO. 7030316-00

THIS DOCUMENT CONTAINS CONFIDENTIAL INFORMATION OF THE UNIVAC DIVISION OF SPERRY RAND CORPORATION AND IS FURNISHED PURSUANT TO THE FOLLOWING INSTRUMENT:

ON THE UNDERSTANDING THAT THIS DOCUMENT AND THE INFORMATION THEREON MAY NOT BE DEALT WITH IN ANY MANNER EXCEPT FOR THE PURPOSES OF THAT INSTRUMENT OR AS OTHERWISE PERMITTED IN WRITING BY THE UNIVAC DIVISION OF SPERRY RAND CORPORATION.

UNLESS OTHERWISE SPECIFIED
DIMENSION IN INCHES. TOLERANCE ON
2 PLACE DECIMALS ±
3 PLACE DECIMALS ±
ANGLES ±
HOLE DIAMETER TOLERANCE
0 THRU .250 +.003 −.002
.251 THRU .500 +.005 −.003
.501 & LARGER +.010 −.005
THREADS: EXT CL 2A, INT CL 2B
MATERIAL
FINISH
NEXT ASSY
EQUIPMENT
APPLICATION
COMMODITY CODE

LAYOUT		DATE
DRAFTSMAN	R. M. BECKMAN	11-9-65
CHECKER	B. POPOV	11/15/65
ENGINEER	R. BELJESKI	11-15-65
APPROVAL		11/15/65

CLASS A

UNIVAC
DIVISION OF SPERRY RAND CORPORATION

TITLE
WIRING SCHEMATIC,
ADD ON UNIT POWER CONTROL
1541 MAGNETIC TAPE UNIT
WATERCOOLED, PART 1

CODE IDENT NO.	SIZE	DWG NO.
90536	D	7030316

SCALE | WEIGHT | SHEET 1 OF 1

REVISIONS						
SYM	ZONE	EIR	DESCRIPTION	DR	DATE	APPROVED
A		69699	SEE EIR		-	7-1-65

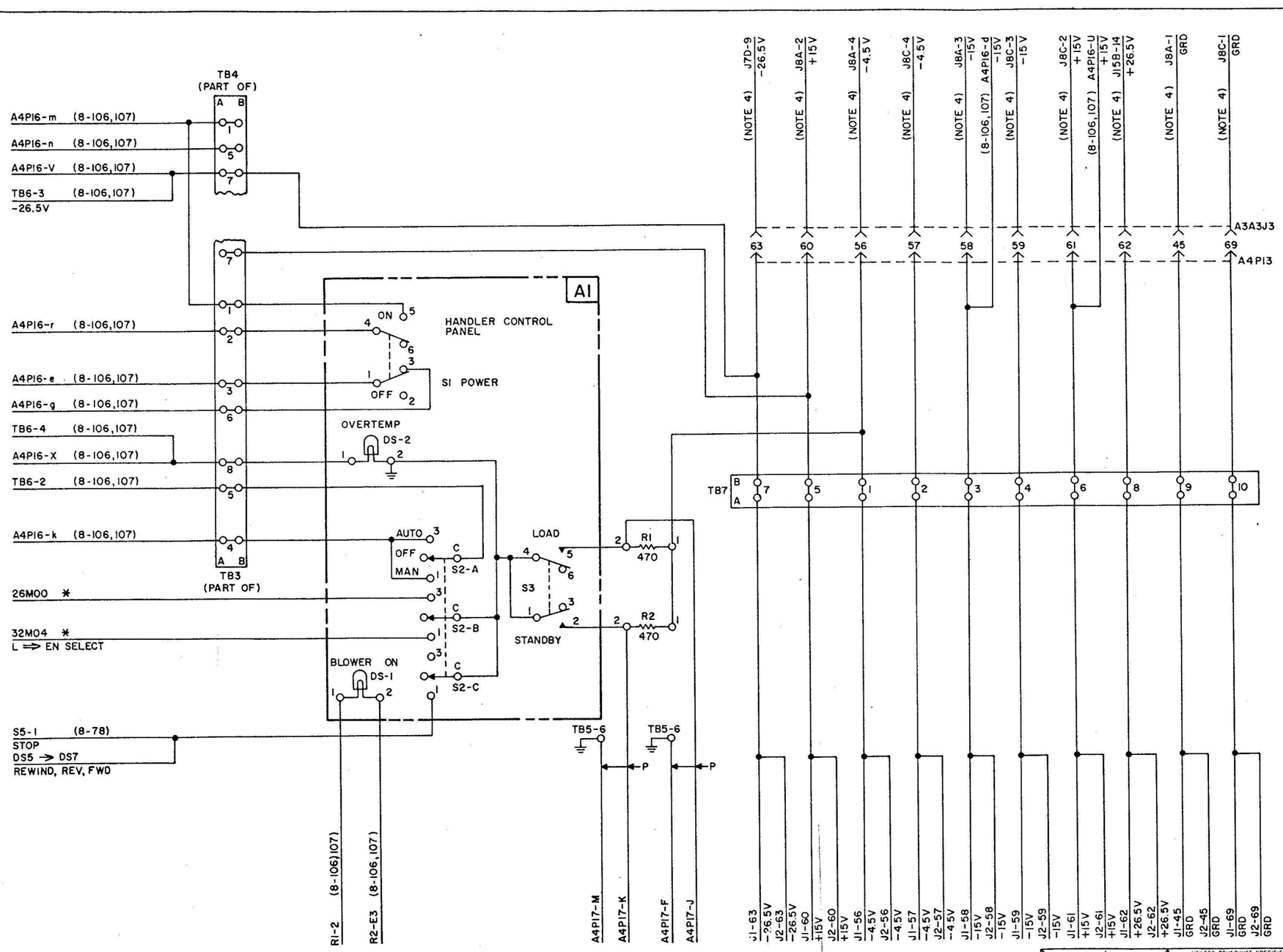

NOTE:

1. JACK J1 CONNECTS BY JUMPER CABLE TO JACK J2 OF BASIC UNIT OR OF ANOTHER ADD ON UNIT (REFER TO INTERCONNECTION DIAGRAM FIGURE 2-9).
2. JACK J2 CONNECTS BY JUMPER CABLE TO JACK J1 OF ANOTHER TAPE HANDLER CABINET (IF USED) OR TO JACK J12 OF BASIC UNIT (REFER TO INTERCONNECTION DIAGRAM FIGURE 2-9).
3. * TO CIRCUITS IDENTICAL WITH THOSE ON FIGURE 8-78.
4. TO CHASSIS A3A3 IDENTICAL TO FIGURE 8-116.
5. SOURCE PINS OF J11 FOR VOLTAGES SHOWN HEREON ARE THE SAME AS THOSE SHOWN ON FIGURE 8-109.

FIGURE 8-108

QTY REQD	FIND	REF DES	CODE IDENT	DWG SIZE	PART OR IDENTIFYING NO.	NOMENCLATURE OR DESCRIPTION

LIST OF MATERIAL

IDENT NO. 7030318-00

THIS DOCUMENT CONTAINS CONFIDENTIAL INFORMATION OF THE UNIVAC DIVISION OF SPERRY RAND CORPORATION AND IS FURNISHED PURSUANT TO THE FOLLOWING INSTRUMENT

ON THE UNDERSTANDING THAT THIS DOCUMENT AND THE INFORMATION THEREON WILL NOT BE DISCLOSED IN ANY MANNER EXCEPT FOR THE PURPOSE OF THIS INSTRUMENT UNLESS OTHERWISE AGREED TO IN WRITING BY THE UNIVAC DIVISION OF SPERRY RAND CORPORATION

UNLESS OTHERWISE SPECIFIED
DIMENSION IN INCHES. TOLERANCE ON
2 PLACE DECIMALS ± .02
3 PLACE DECIMALS ± .005
ANGLES ±
HOLE DIAMETER TOLERANCE
0 THRU .250 +.003 −.002
.251 THRU .500 +.005 −.003
.501 & LARGER +.010 −.005
THREADS: EXT CL 2A, INT CL 2B
MATERIAL
FINISH
NEXT ASSY
EQUIPMENT
APPLICATION
COMMODITY CODE

LAYOUT		DATE
DRAFTSMAN D.C. WHEELER		11-4-65
CHECKER B. POPOV	RPB BF	11/15/65
ENGINEER R. BELJESKI	RJB	11-15-65
APPROVAL K. Hendley		11/15/65

CLASS A

UNIVAC
DIVISION OF SPERRY RAND CORPORATION

TITLE
WIRING SCHEMATIC,
ADD ON UNIT POWER CONTROL
1541 MAGNETIC TAPE UNIT, PART 2

CODE IDENT NO.	SIZE	DWG NO.
90536	D	7030318

SCALE | WEIGHT | SHEET 1 OF 1

REVISIONS						
SYM	ZONE	EJR	DESCRIPTION	CHK	DATE	APPROVED

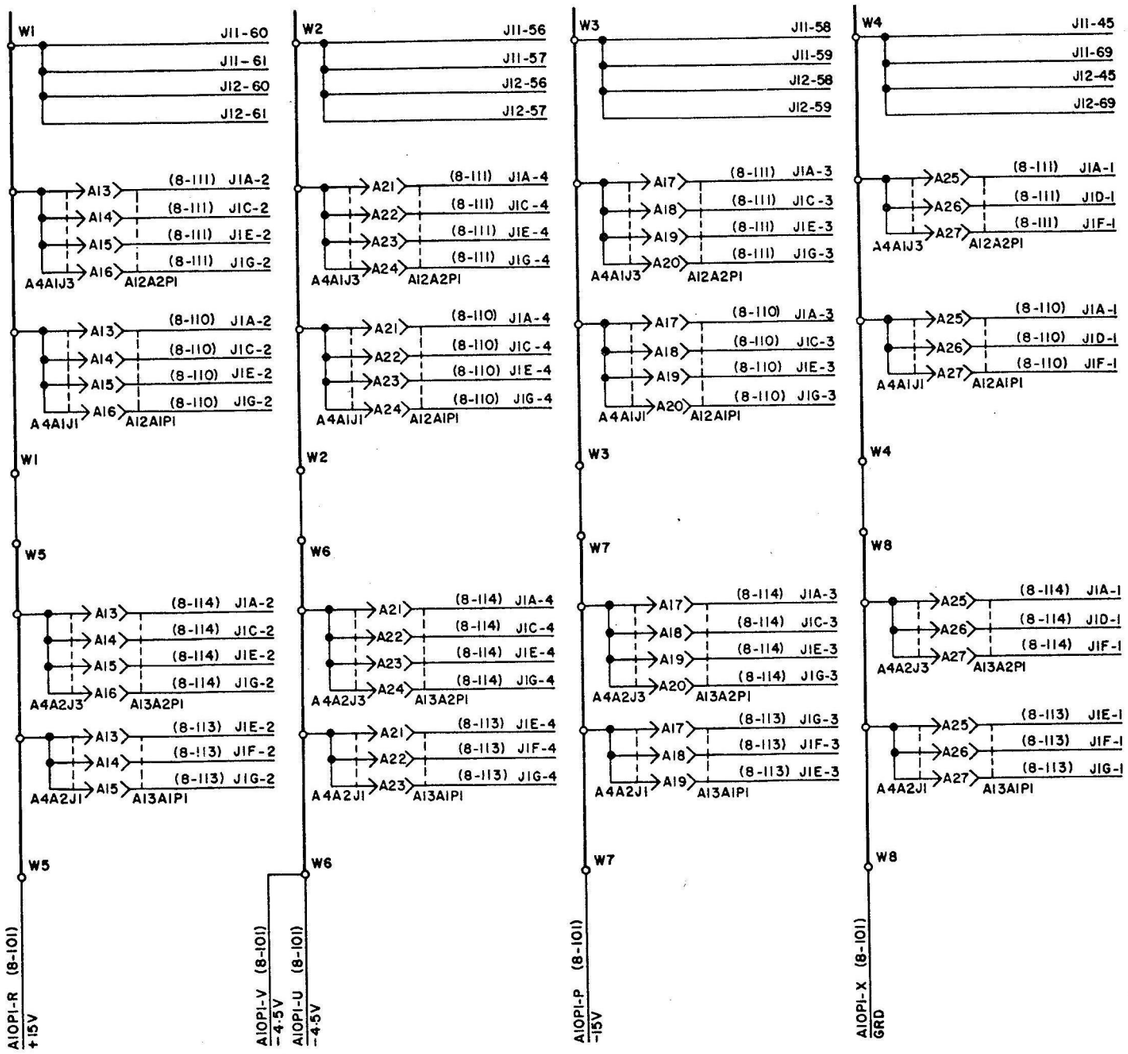

NOTE:
1. JACK J11 CONNECTS BY JUMPER CABLE TO JACK J1 OF BASIC HANDLER CABINET. (SEE INTERCONNECTION DIAGRAM FIGURE 2-9)
2. JACK J12 CONNECTS BY JUMPER CABLE TO JACK J1 OF RIGHT HAND ADD ON UNIT (IF USED) (SEE INTERCONNECTION DIAGRAM FIGURE 2-9)

FIGURE 8-109

QTY REQD	FIND	REF DES	CODE IDENT	DWG SIZE	PART OR IDENTIFYING NO.	NOMENCLATURE OR DESCRIPTION

LIST OF MATERIAL

IDENT NO. 7030294-00

THE INFORMATION CONTAINED IN THIS DOCUMENT IS CONFIDENTIAL INFORMATION OF SPERRY RAND CORPORATION AND IS LOANED SUBJECT TO THE UNDERSTANDING THAT IT WILL NOT BE REPRODUCED, COPIED, DISCLOSED, OR USED IN WHOLE OR IN PART EXCEPT AS AUTHORIZED IN WRITING BY SPERRY RAND CORPORATION.

ON THE UNDERSTANDING THAT THIS DOCUMENT AND THE INFORMATION CONTAINED HEREIN IS TO BE KEPT IN CONFIDENCE AND PROPRIETARY INFORMATION OF SPERRY RAND CORPORATION AND IS NOT TO BE PUBLISHED OR REPRODUCED IN WHOLE OR IN PART, NOR USED FOR MANUFACTURE BY ANYONE OTHER THAN SPERRY RAND CORPORATION OR ITS LICENSEES, THIS DRAWING IS LOANED SUBJECT TO RETURN ON REQUEST.

UNLESS OTHERWISE SPECIFIED
DIMENSION IN INCHES TOLERANCE ON
2 PLACE ± | 3 PLACE ± | ANGLES ±
HOLE DIAMETER TOLERANCE
0 THRU .250 +.003 −.002 | 251 THRU .500 +.005 −.003 | 501 & LARGER +.010 −.005
THREADS, EXT. CL 2A, INT. CL 2B
MATERIAL
FINISH
NEXT ASSY | EQUIPMENT
APPLICATION
COMMODITY CODE

		DATE
LAYOUT		
DRAFTSMAN	V STEEBER	11-2-65
CHECKER	B POPOV	11/15/65
ENGINEER	R. BELJESKI	11-15-65
APPROVAL		11/15/65

CLASS A

UNIVAC
DIVISION OF SPERRY RAND CORPORATION

TITLE
WIRING DIAGRAM
DC POWER DISTRIBUTION
1540/1541 MAGNETIC TAPE UNIT

CODE IDENT NO.	SIZE	DWG NO.
90536	D	7030294

SCALE | WEIGHT | SHEET 1 OF 1

REVISIONS						
SYM	ZONE	EIR	DESCRIPTION	DR	DATE	APPROVED
A		91338	SEE EIR		5-25-67	

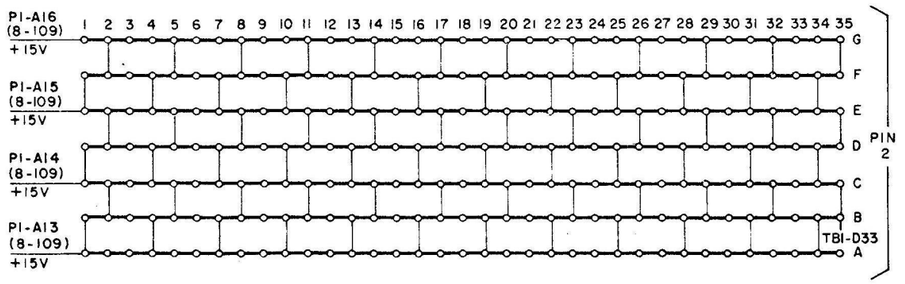

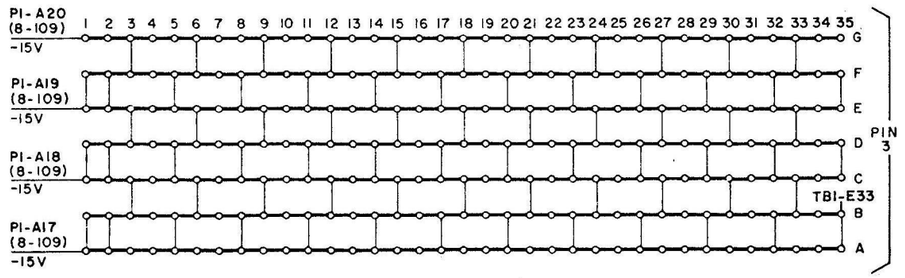

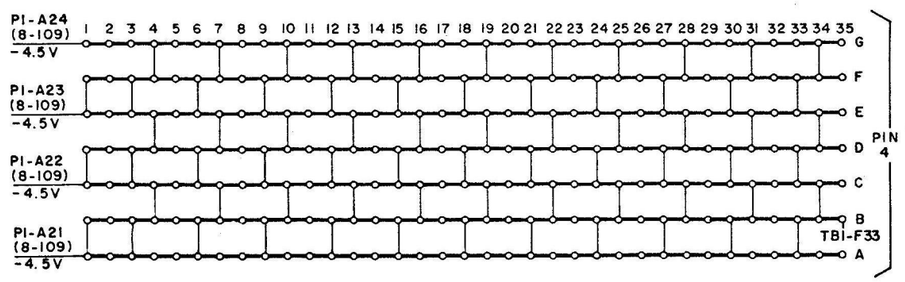

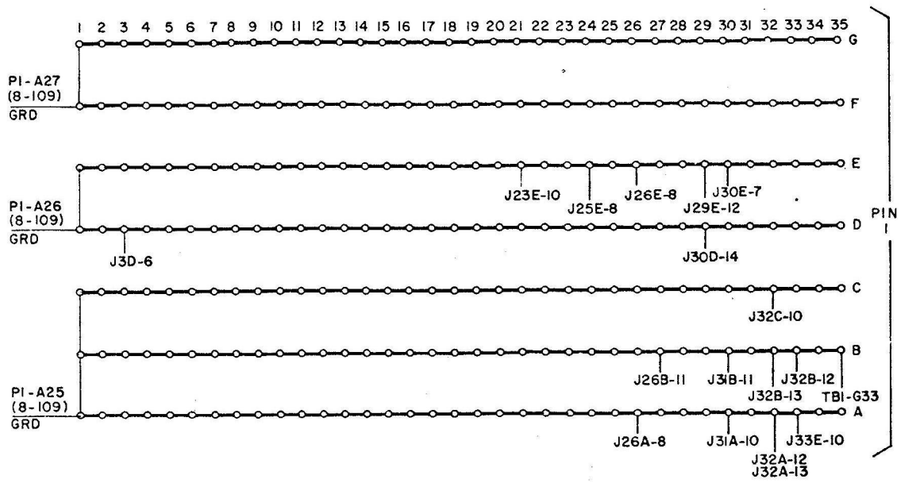

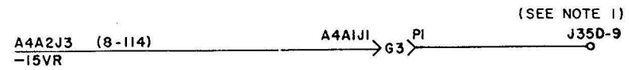

NOTE:
1. -15VR TO J35D-9 DOES NOT EXIST ON 1540A.

FIGURE 8-110

QTY REQD	FIND	REF DES	CODE IDENT	DWG SIZE	PART OR IDENTIFYING NO.	NOMENCLATURE OR DESCRIPTION

LIST OF MATERIAL

IDENT NO. 7030304-00

THIS DOCUMENT CONTAINS CONFIDENTIAL INFORMATION OF THE UNIVAC DIVISION OF SPERRY RAND CORPORATION AND IS FURNISHED PURSUANT TO THE FOLLOWING INSTRUMENT

ON THE UNDERSTANDING THAT THIS DOCUMENT AND THE INFORMATION HEREIN WILL NOT BE DISCLOSED IN ANY MANNER EXCEPT FOR THE PURPOSES OF THIS INSTRUMENT OR AS OTHERWISE PERMITTED IN WRITING BY THE UNIVAC DIVISION OF SPERRY RAND CORPORATION

UNLESS OTHERWISE SPECIFIED
DIMENSION IN INCHES TOLERANCE ON
2 PLACE DECIMALS ± | 3 PLACE DECIMALS ± | ANGLES ±
HOLE DIAMETER TOLERANCE
0 THRU 250 +.003 −.002 | 251 THRU 500 +.005 −.003 | 501 & LARGER +.010 −.005
THREADS EXT CL 2A, INT CL 2B
MATERIAL
FINISH
NEXT ASSY | EQUIPMENT
APPLICATION
COMMODITY CODE

		DATE
LAYOUT		
DRAFTSMAN	V. STEEBER	10-7-65
CHECKER	B. POPOV	11/15/65
ENGINEER	R. BELJESKI	11-15-65
APPROVAL		11/15/65

CLASS A

UNIVAC
DIVISION OF SPERRY RAND CORPORATION

TITLE
POWER DISTRIBUTION
CHASSIS A12A1

CODE IDENT NO.	SIZE	DWG NO.
90536	D	7030304

SCALE | WEIGHT | SHEET 1 OF 1

REVISIONS						
SYM	ZONE	E/R	DESCRIPTION	ON	DATE	APPROVED

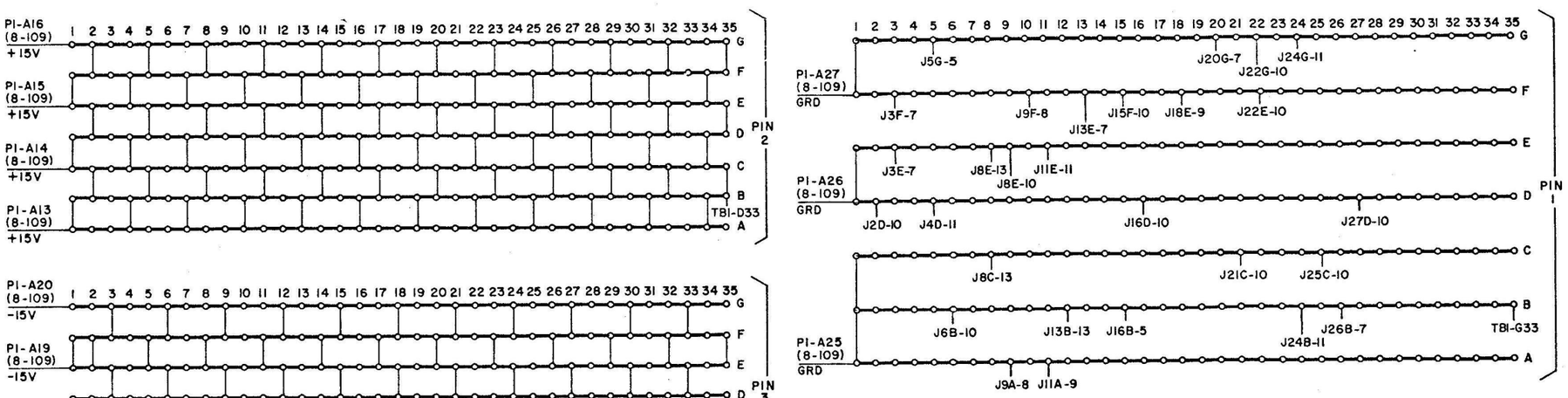

FIGURE 8-111

QTY REQD	FIND	REF DES	CODE IDENT	DWG SIZE	PART OR IDENTIFYING NO.	NOMENCLATURE OR DESCRIPTION

LIST OF MATERIAL

IDENT NO. 7030305-00

THIS DOCUMENT CONTAINS CONFIDENTIAL INFORMATION OF THE UNIVAC DIVISION OF SPERRY RAND CORPORATION AND IS FURNISHED PURSUANT TO THE FOLLOWING INSTRUMENT:

ON THE UNDERSTANDING THAT THIS DOCUMENT AND THE INFORMATION IT CONTAINS MAY NOT BE DEALT WITH IN ANY MANNER DETRIMENTAL TO THE PURPOSES OF THAT INSTRUMENT OR AS OTHERWISE PERMITTED IN WRITING BY THE UNIVAC DIVISION OF SPERRY RAND CORPORATION.

UNLESS OTHERWISE SPECIFIED
DIMENSION IN INCHES. TOLERANCE ON 2 PLACE DECIMALS ± | 3 PLACE DECIMALS ± | ANGLES ±
HOLE DIAMETER TOLERANCE
0 THRU .250 +.003 −.002 | .251 THRU .300 +.005 −.003 | .301 & LARGER +.010 −.005
THREADS: EXT CL 2A, INT CL 2B
MATERIAL
FINISH
NEXT ASSY | EQUIPMENT
APPLICATION
COMMODITY CODE

		DATE
LAYOUT		
DRAFTSMAN	V. STEEBER	10-7-65
CHECKER	B. POPOV	11/9/65
ENGINEER	R. BELJESKI	11-15-65
APPROVAL		11/15/65

CLASS A

UNIVAC
DIVISION OF SPERRY RAND CORPORATION

TITLE
POWER DISTRIBUTION
CHASSIS A12A2

CODE IDENT NO.	SIZE	DWG NO.
90536	D	7030305

SCALE | WEIGHT | SHEET | OF

REVISIONS						
SYM	ZONE	E/R	DESCRIPTION	ECR	DATE	APPROVED

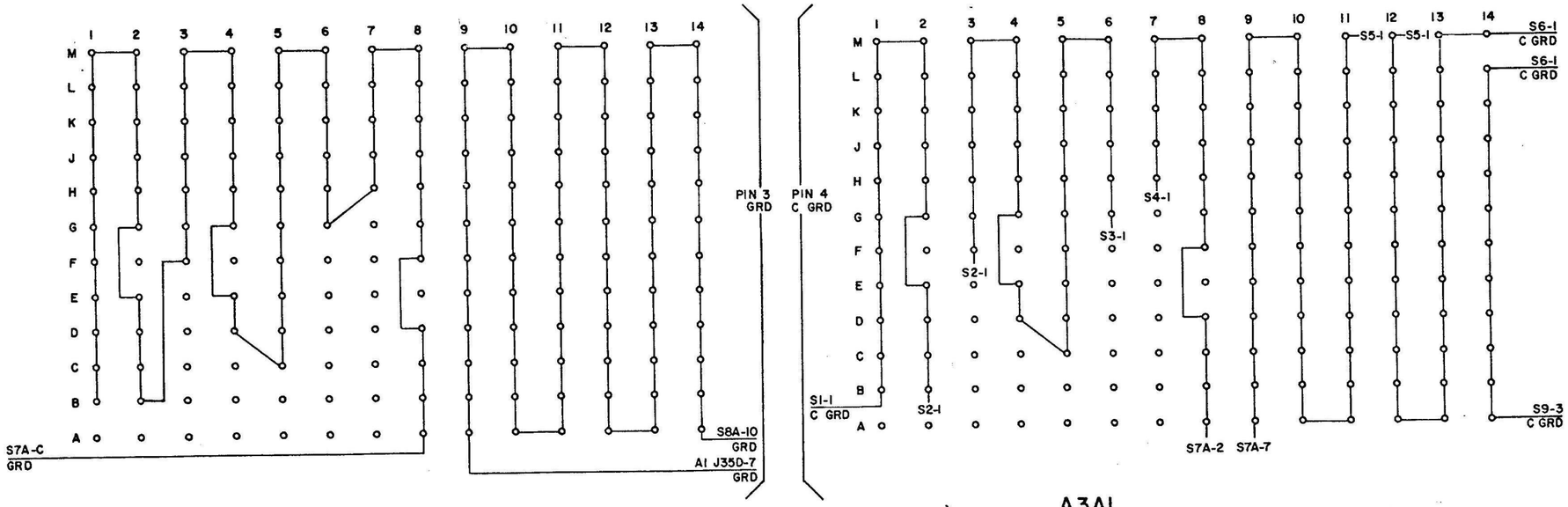

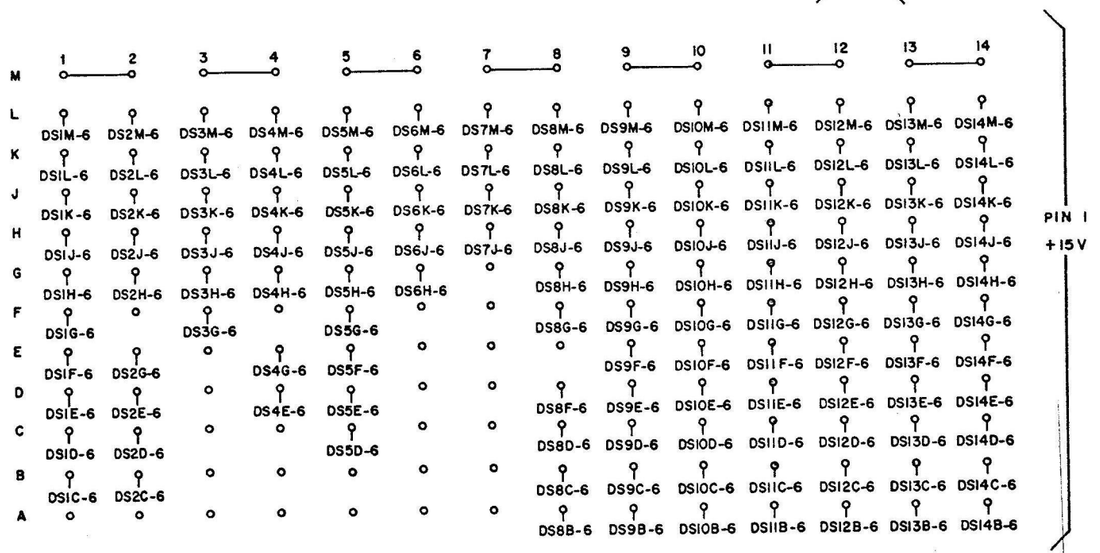

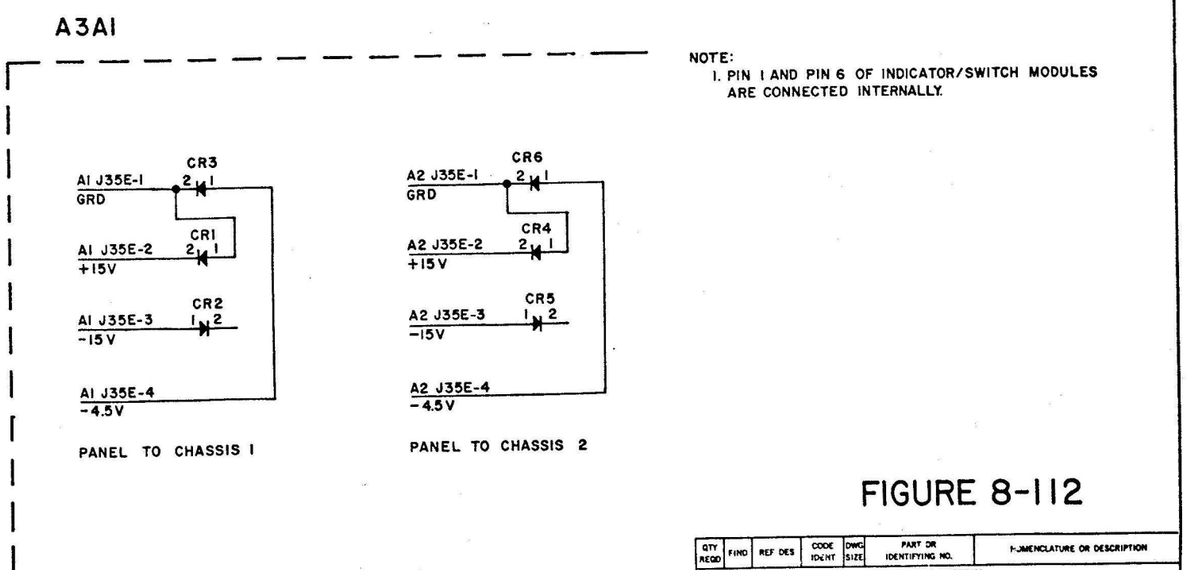

FIGURE 8-112

QTY REQD	FIND	REF DES	CODE IDENT	DWG SIZE	PART OR IDENTIFYING NO.	NOMENCLATURE OR DESCRIPTION

LIST OF MATERIAL

IDENT NO. 7030306-00

THIS DOCUMENT CONTAINS CONFIDENTIAL INFORMATION OF THE UNIVAC DIVISION OF SPERRY RAND CORPORATION AND IS FURNISHED PURSUANT TO THE FOLLOWING INSTRUMENT.

ON THE UNDERSTANDING THAT THIS DOCUMENT AND THE INFORMATION CONTAINED THEREIN MAY NOT BE DEALT WITH IN ANY MANNER EXCEPT FOR THE PURPOSES OF THAT INSTRUMENT OR AS OTHERWISE PERMITTED IN WRITING BY THE UNIVAC DIVISION OF SPERRY RAND CORPORATION.

UNLESS OTHERWISE SPECIFIED
DIMENSION IN INCHES. TOLERANCE ON 2 PLACE DECIMALS ±, 3 PLACE DECIMALS ±, ANGLES ±
HOLE DIAMETER TOLERANCE: 0 THRU .250 +.003 −.002; 251 THRU .500 +.005 −.003; 501 & LARGER +.010 −.005
THREADS: EXT CL 2A, INT CL 2B
MATERIAL
FINISH
NEXT ASSY | EQUIPMENT
APPLICATION
COMMODITY CODE

LAYOUT		DATE
DRAFTSMAN	V. STEEBER	10-3-65
CHECKER	B. POPOV	11-15-65
ENGINEER	R. BELJESKI	11-15-65
APPROVAL	R Hemsley	11/15/65

CLASS A

UNIVAC
DIVISION OF SPERRY RAND CORPORATION

TITLE
POWER DISTRIBUTION
CHASSIS A12A1 & A12A2
PANEL WIRING

CODE IDENT NO.	SIZE	DWG NO.
90536	D	7030306

SCALE | WEIGHT | SHEET 1 OF 1

REVISIONS						
SYM	ZONE	EIR	DESCRIPTION	ECR	DATE	APPROVED
A		69698	SEE EIR		-	
B		100441	SEE EIR		8-21-67	
C		96784	SEE EIR		11-16-67	

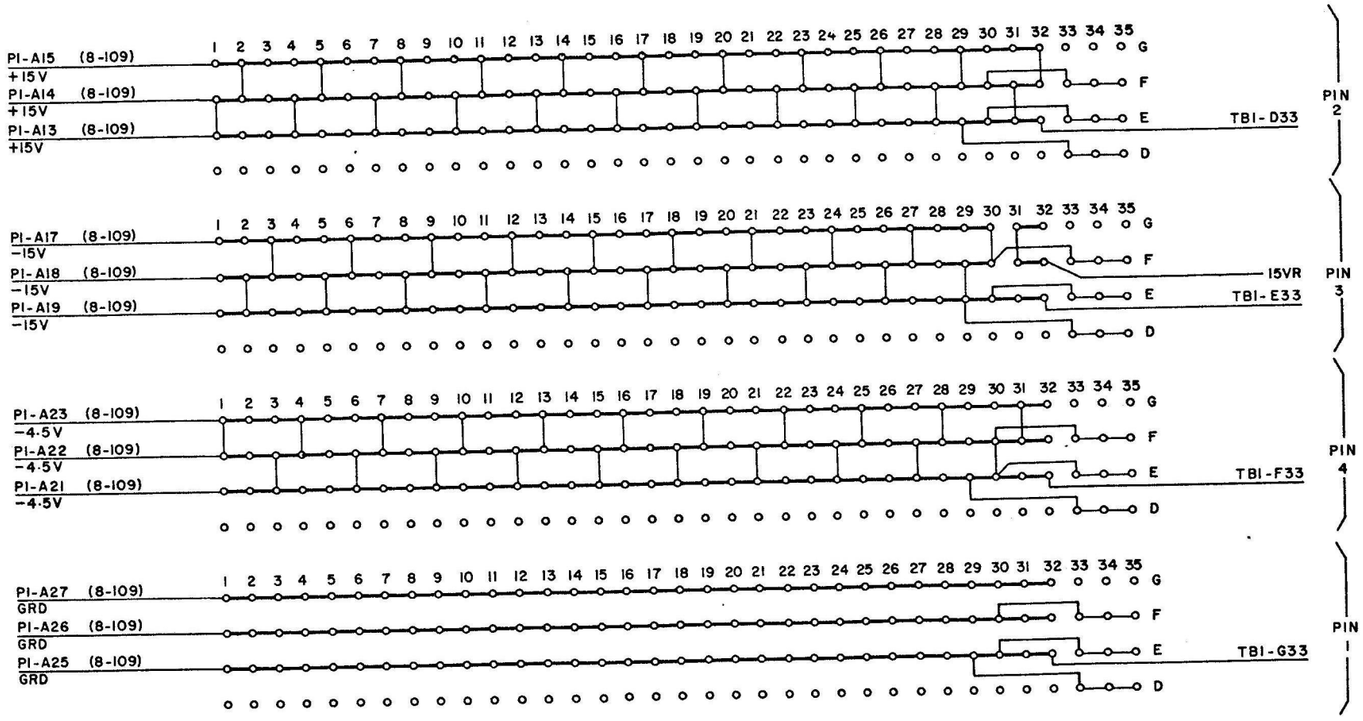

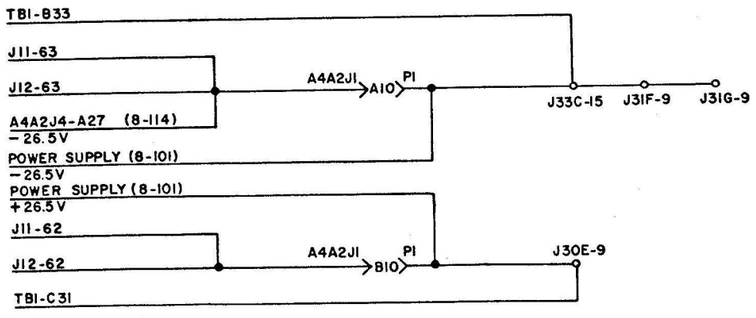

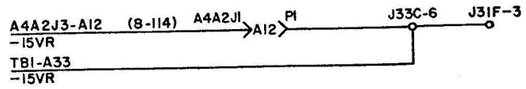

NOTE:
1. J33C ACCOMMODATES A -15V REGULATOR MODULE.
2. JACK J11 CONNECTS BY JUMPER CABLE TO J1 OF BASIC UNIT HANDLER CABINET. FIGURE 8-96. (REFER TO INTERCONNECTION DIAGRAM FIGURE 2-9)
3. JACK J12 CONNECTS BY JUMPER CABLE TO JACK J1 OF FIRST ADD ON UNIT ON RIGHT (IF USED). (REFER TO INTERCONNECTION DIAGRAM FIGURE 2-9)

FIGURE 8-113

QTY REQD	FIND	REF DES	CODE IDENT	DWG SIZE	PART OR IDENTIFYING NO.	NOMENCLATURE OR DESCRIPTION

LIST OF MATERIAL

IDENT NO. 7030307-00

THIS DOCUMENT CONTAINS CONFIDENTIAL INFORMATION OF THE UNIVAC DIVISION OF SPERRY RAND CORPORATION AND IS FURNISHED PURSUANT TO THE FOLLOWING INSTRUMENT:

ON THE UNDERSTANDING THAT THIS DOCUMENT AND THE INFORMATION THEREIN MAY NOT BE DEALT WITH IN ANY MANNER EXCEPT FOR THE PURPOSES OF THAT INSTRUMENT OR AS OTHERWISE PERMITTED IN WRITING BY THE UNIVAC DIVISION OF SPERRY RAND CORPORATION.

UNLESS OTHERWISE SPECIFIED
DIMENSION IN INCHES. TOLERANCE ON 2 PLACE DECIMALS ±, 3 PLACE DECIMALS ±, ANGLES ±
HOLE DIAMETER TOLERANCE: 0 THRU .250 +.003 −.002; .251 THRU .500 +.005 −.003; .501 & LARGER +.010 −.005
THREADS: EXT CL 2A, INT CL 2B
MATERIAL
FINISH
NEXT ASSY | EQUIPMENT
APPLICATION
COMMODITY CODE

		DATE
LAYOUT		
DRAFTSMAN	V. STEEBER	9-29-65
CHECKER	B. POPOV	11/5/65
ENGINEER	R. BELJESKI	11-15-65
APPROVAL		11/15/65

CLASS A

UNIVAC
DIVISION OF SPERRY RAND CORPORATION

TITLE
POWER DISTRIBUTION
CHASSIS A13A1

CODE IDENT NO.	SIZE	DWG NO.
90536	D	7030307

SCALE | WEIGHT | SHEET 1 OF 1

REVISIONS						
SYM	ZONE	EIR	DESCRIPTION	DR	DATE	APPROVED
A		69698	SEE EIR			
B		91338	SEE EIR			

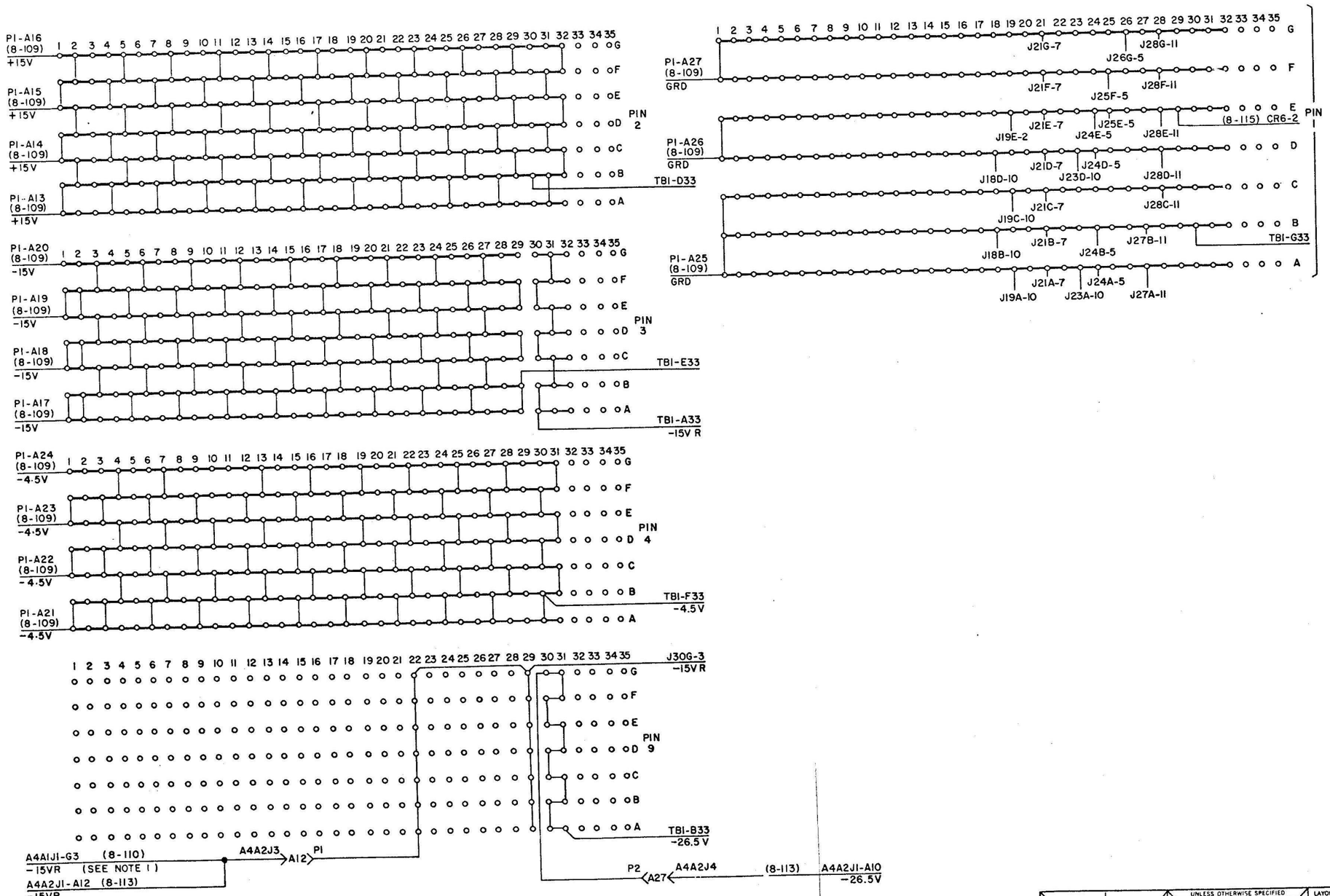

NOTE:
1. -15VR TO A4A1J1-G3 DOES NOT EXIST ON 1540A.

FIGURE 8-114

QTY REQD	FIND	REF DES	CODE IDENT	DWG SIZE	PART OR IDENTIFYING NO.	NOMENCLATURE OR DESCRIPTION

LIST OF MATERIAL

IDENT NO. 7030308-00

THIS DOCUMENT CONTAINS CONFIDENTIAL INFORMATION OF THE UNIVAC DIVISION OF SPERRY RAND CORPORATION AND IS FURNISHED PURSUANT TO THE FOLLOWING INSTRUMENT:

ON THE UNDERSTANDING THAT THIS DOCUMENT AND THE INFORMATION THEREON WILL NOT BE DEALT WITH IN ANY MANNER EXCEPT FOR THE PURPOSES OF THAT INSTRUMENT OR AS OTHERWISE PERMITTED IN WRITING BY THE UNIVAC DIVISION OF SPERRY RAND CORPORATION.

UNLESS OTHERWISE SPECIFIED
DIMENSION IN INCHES TOLERANCE ON
2 PLACE DECIMALS ± | 3 PLACE DECIMALS ± | ANGLES ±
HOLE DIAMETER TOLERANCE
0 THRU .330 +.003 −.002 | .331 THRU .500 +.005 −.003 | .501 & LARGER +.010 −.005
THREADS: EXT CL 2A, INT CL 2B
MATERIAL
FINISH
NEXT ASSY | EQUIPMENT
APPLICATION
COMMODITY CODE

LAYOUT		DATE
DRAFTSMAN V. STEEBER		9-29-65
CHECKER B. POPOV	WB BP	11/15/65
ENGINEER R. BELJESKI	RBJ	11-15-65
APPROVAL R. Hinckley		11/15/65

CLASS A

UNIVAC
DIVISION OF SPERRY RAND CORPORATION

TITLE
POWER DISTRIBUTION
CHASSIS A13A2

CODE IDENT NO.	SIZE	DWG NO.
90536	D	7030308

SCALE | WEIGHT | SHEET 1 OF 1

REVISIONS						
SYM	ZONE	EIR	DESCRIPTION	CHK	DATE	APPROVED

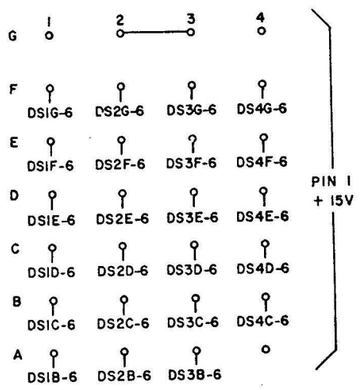

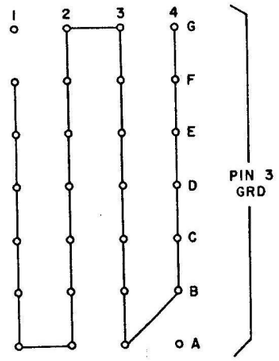

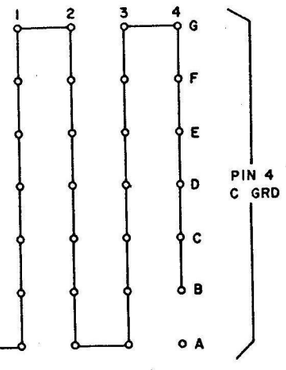

A3A1

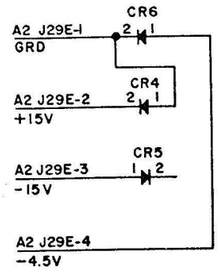

PANEL TO CHASSIS 4

NOTE:
1. PIN 1 AND PIN 6 OF INDICATOR/SWITCH MODULES ARE JUMPERED INTERNALLY.

FIGURE 8-115

QTY REQD	FIND	REF DES	CODE IDENT	DWG SIZE	PART OR IDENTIFYING NO.	NOMENCLATURE OR DESCRIPTION

LIST OF MATERIAL

IDENT NO. 7030309-00

THIS DOCUMENT CONTAINS CONFIDENTIAL INFORMATION OF THE UNIVAC DIVISION OF SPERRY RAND CORPORATION AND IS FURNISHED PURSUANT TO THE FOLLOWING INSTRUMENT:

ON THE UNDERSTANDING THAT THIS DOCUMENT AND THE INFORMATION THEREON MAY NOT BE DEALT WITH IN ANY MANNER EXCEPT FOR THE PURPOSES OF THAT INSTRUMENT OR AS OTHERWISE PERMITTED IN WRITING BY THE UNIVAC DIVISION OF SPERRY RAND CORPORATION

UNLESS OTHERWISE SPECIFIED
DIMENSION IN INCHES. TOLERANCE ON
2 PLACE DECIMALS ± | 3 PLACE DECIMALS ± | ANGLES ±
HOLE DIAMETER TOLERANCE
0 THRU .250: +.003 −.002 | .251 THRU .300: +.005 −.005 | .301 & LARGER: +.010 −.005
THREADS: EXT CL 2A, INT CL 2B
MATERIAL
FINISH
NEXT ASSY | EQUIPMENT
APPLICATION
COMMODITY CODE

		DATE
LAYOUT		
DRAFTSMAN	V. STEEBER	9-29-65
CHECKER	B. POPOV	11/5/65 BP
ENGINEER	R. BELJESKI	RJB 11-15-65
APPROVAL		11/15/65

CLASS A

UNIVAC
DIVISION OF SPERRY RAND CORPORATION

TITLE
POWER DISTRIBUTION
CHASSIS A13A1 & A13A2
PANEL WIRING

CODE IDENT NO.	SIZE	DWG NO.
90536	D	7030309

SCALE | WEIGHT | SHEET 1 OF 1

REVISIONS						
SYM	ZONE	EIR	DESCRIPTION	ENG	DATE	APPROVED
A		91316	SEE EIR		6-12-67	

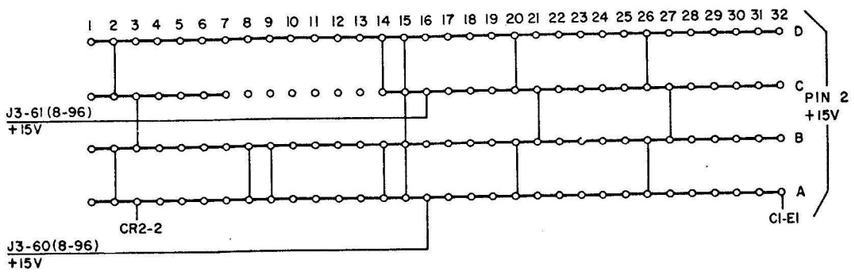

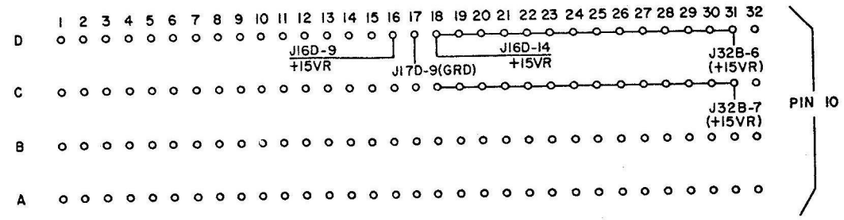

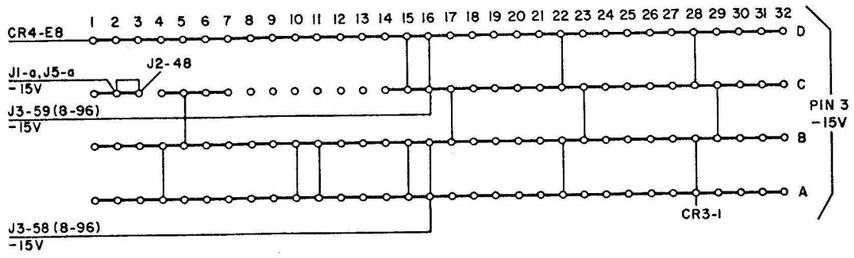

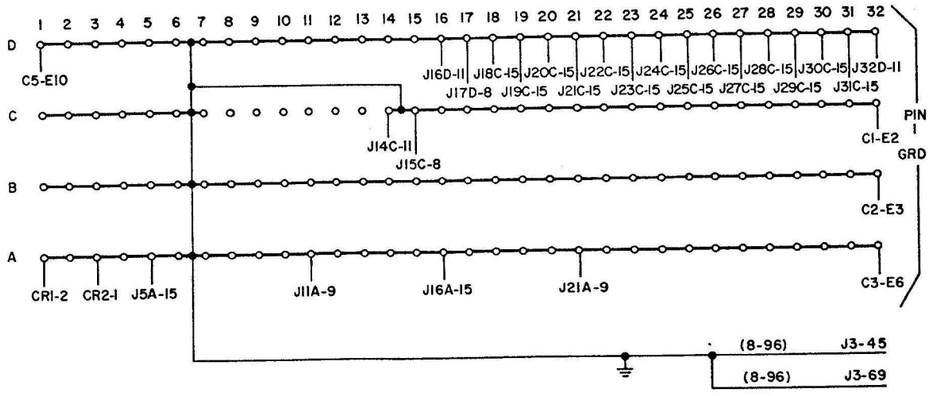

A17

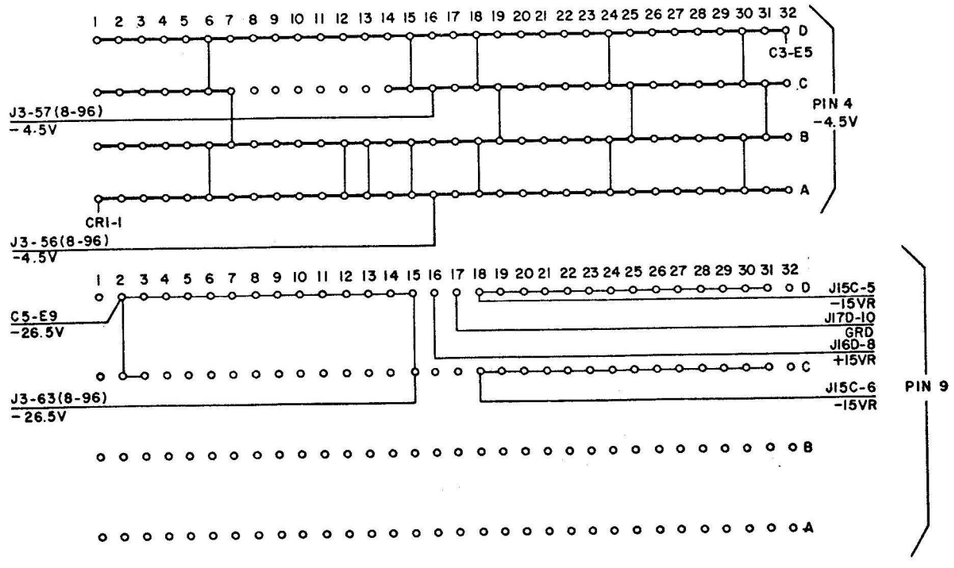

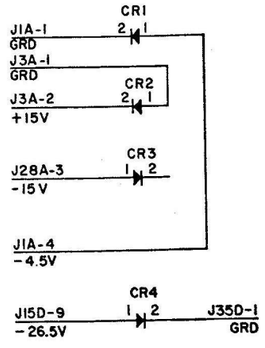

FIGURE 8-116

QTY REQD	FIND	REF DES	CODE IDENT	DWG SIZE	PART OR IDENTIFYING NO.	NOMENCLATURE OR DESCRIPTION

LIST OF MATERIAL

IDENT NO. 7030310-00

THIS DOCUMENT CONTAINS CONFIDENTIAL INFORMATION OF THE UNIVAC DIVISION OF SPERRY RAND CORPORATION AND IS FURNISHED PURSUANT TO THE FOLLOWING INSTRUMENT:

ON THE UNDERSTANDING THAT THIS DOCUMENT AND THE INFORMATION THEREON, MAY NOT BE DISCLOSED IN ANY MANNER EXCEPT FOR THE PURPOSES SET OUT IN THIS INSTRUMENT OR AS OTHERWISE PERMITTED IN WRITING BY THE UNIVAC DIVISION OF SPERRY RAND CORPORATION

UNLESS OTHERWISE SPECIFIED
DIMENSION IN INCHES. TOLERANCE ON
2 PLACE DECIMALS ±
3 PLACE DECIMALS ±
ANGLES ±
HOLE DIAMETER TOLERANCE
0 THRU .250 +.003 −.002
.251 THRU .500 +.005 −.003
.501 & LARGER +.010 −.005
THREADS: EXT CL 2A, INT CL 2B
MATERIAL
FINISH
NEXT ASSY
EQUIPMENT
APPLICATION
COMMODITY CODE

LAYOUT		DATE
DRAFTSMAN	V. STEEBER	11-3-65
CHECKER	B. POPOV	11/14/65
ENGINEER	R. BELJESKI	11-15-65
APPROVAL		11/15/65

CLASS A

UNIVAC
DIVISION OF SPERRY RAND CORPORATION

TITLE
POWER DISTRIBUTION
CHASSIS A17-1540 MTU

CODE IDENT NO.	SIZE	DWG NO.
90536	D	7030310

SCALE | WEIGHT | SHEET 1 OF 1

REVISIONS						
SYM	ZONE	E/R	DESCRIPTION	CHK	DATE	APPROVED

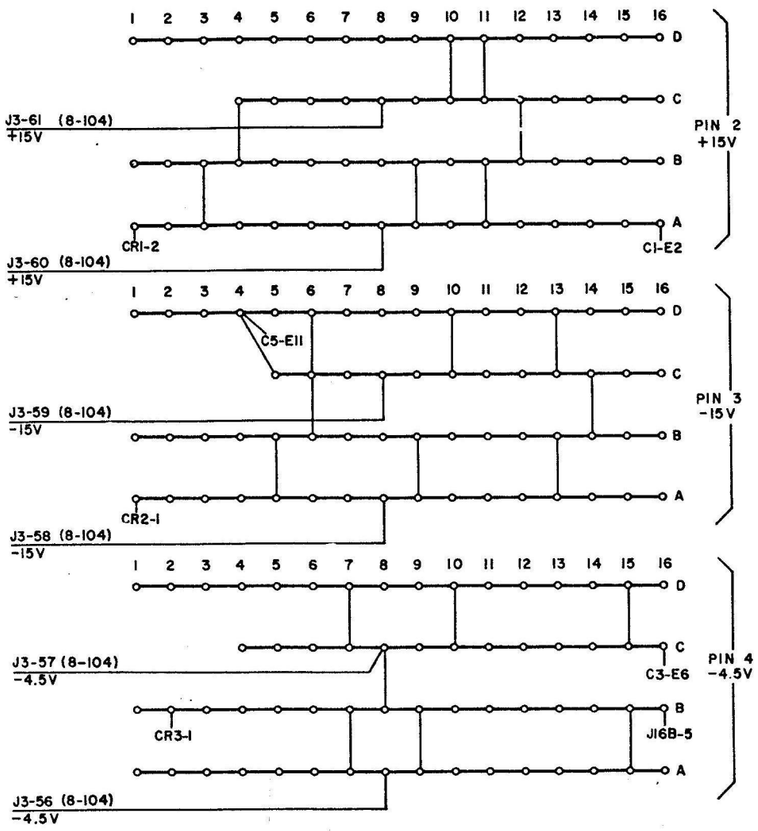

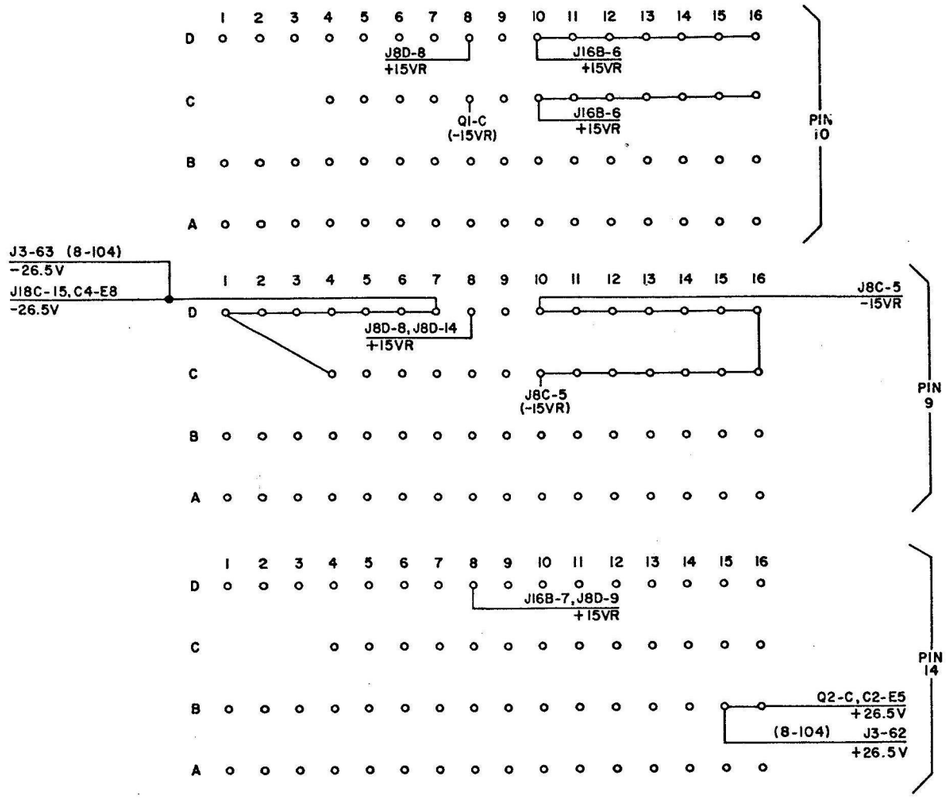

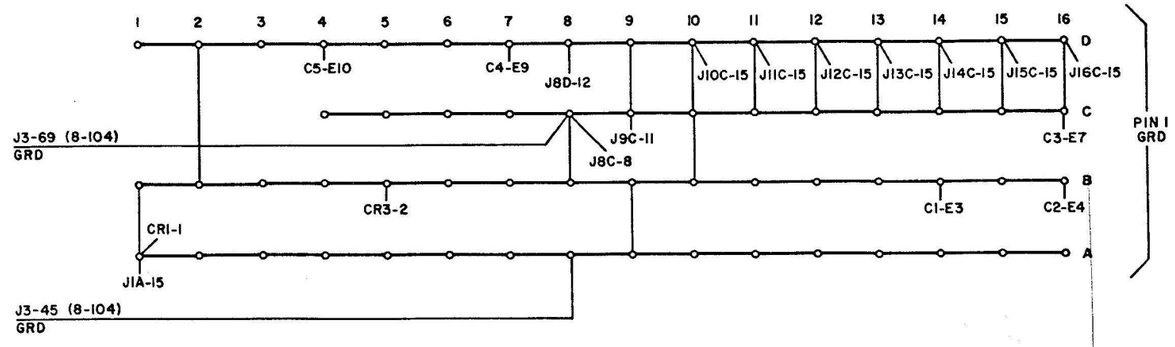

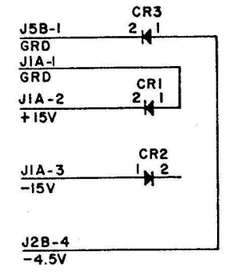

A3A3

FIGURE 8-117

QTY REQD	FIND	REF DES	CODE IDENT	DWG SIZE	PART OR IDENTIFYING NO.	NOMENCLATURE OR DESCRIPTION

LIST OF MATERIAL

IDENT NO. 7030311-00

THIS DOCUMENT CONTAINS CONFIDENTIAL INFORMATION OF THE UNIVAC DIVISION OF SPERRY RAND CORPORATION AND IS FURNISHED PURSUANT TO THE FOLLOWING INSTRUMENT

OR THE UNDERSTANDING THAT THIS DOCUMENT AND THE INFORMATION THEREON, MAY NOT BE DEALT WITH IN ANY MANNER EXCEPT FOR THE PURPOSES OF THAT INSTRUMENT OR AS OTHERWISE PERMITTED IN WRITING BY THE UNIVAC DIVISION OF SPERRY RAND CORPORATION

UNLESS OTHERWISE SPECIFIED
DIMENSION IN INCHES. TOLERANCE ON
2 PLACE DECIMALS ± | 3 PLACE DECIMALS ± | ANGLES ±
HOLE DIAMETER TOLERANCE
0 THRU 250: +.003 −.002 | 251 THRU 500: ±.005 | 501 & LARGER: +.010 −.005
THREADS EXT CL 2A, INT CL 2B
MATERIAL
FINISH
NEXT ASSY | EQUIPMENT
APPLICATION
COMMODITY CODE

		DATE
LAYOUT		
DRAFTSMAN	V. STEEBER	11-3-65
CHECKER	B. POPOV	11/15/65
ENGINEER	R. BELJESKI	11-15-65
APPROVAL		11/15/65

CLASS A

UNIVAC
DIVISION OF SPERRY RAND CORPORATION

TITLE
POWER DISTRIBUTION
CHASSIS A3A3-1541 MTU

CODE IDENT NO.	SIZE	DWG NO.
90536	D	7030311

SCALE | WEIGHT | SHEET 1 OF 1

	1	2	3	4	5	6	7	8	9	10	11	12	13	14	15	16	17	18	19	20	21	22	23	24	25	26	27	28	29	30	31	32	33	34	35	
G		00Y00 55 00Y01 55	00Y02 55 00Y03 55	00Y04 56 00Y05 56	00Y06 56 00Y07 56	00Y08 57 00Y09 57	00Y10 57 00Y11 57	00Y12 58 00Y13 58	00Y14 58 00Y15 58	00Y16 59 00Y17 59	00Y18 59 00Y19 59	00Y20 60 00Y21 60	00Y22 60 00Y23 60	00Y24 61 00Y25 61	00Y26 61 00Y27 61	00Y28 62 00Y29 62	00Y30 62 00Y31 62	00Y32 63 00Y33 63	00Y34 63 00Y35 63	51A00 48 51A01 48	50Y01 2 50Y02 2	60B13 2 60B12 2	0XB01 2	62B12 3 51B00 3	60Y00 5	70Y00 6	13D10 4 14D10 4 15D10 4 16D10 4 72V00 28	18S14 24 03DD4 6 23S04 23 30D00 5 30D10 6	13D03 4 14D03 4 13D13 4 14D13 4 02C06 56	0XD06 4	21D03 4 21D13 4	61T06 8 02S09 24 14C00 23	0XT04 7 0XT23 11	49T06 8		G
	3180	*	*	*	*	*	*	*	*	*	*	*	*	*	*	*	*	*	*	2050	*	2830	2020	2050	**	**	2070	2070	2070	2020	2220	2060	2930	3580	3180		
F		10Y00 55 10Y01 55	10Y02 55 10Y03 55	10Y04 56 10Y05 56	10Y06 56 10Y07 56	10Y08 57 10Y09 57	10Y10 57 10Y11 57	10Y12 58 10Y13 58	10Y14 58 10Y15 58	10Y16 59 10Y17 59	10Y18 59 10Y19 59	10Y20 60 10Y21 60	10Y22 60 10Y23 60	10Y24 61 10Y25 61	10Y26 61 10Y27 61	10Y28 62 10Y29 62	10Y30 62 10Y31 62	10Y32 63 10Y33 63	10Y34 63 10Y35 63	19C16 59 19C17 59	53A00 48	20B01 2 20B00 2 66B10 3 31B02 3	61B13 2 61B12 2 62B11 2	51D06 4 0XD06 4	0XD00 5	0XD10 6	17T03 7 17D13 4 17D16 4	20T01 7 51V00 28	54V00 28 12C00 23 53V00 28	71V00 28 57G01 92	57G02 92 57G04 93	56G02 92 52T06 8 21D17 6 24C00 55 03C02 55	15C00 23 18D03 6 18D13 5	31D07 23 22S04 23 25C04 56		F
	3180	*	*	*	*	*	*	*	*	*	*	*	*	*	*	*	*	*	*	2050	2040	3290	2060	2050	2000	2000	2990	2050	2060	2012	2012	2070	3290	2060	3180		
E		0XA00 42 0XA01 42	0XA02 42 0XA03 42	0XA04 42 0XA05 42	0XA10 43 0XA11 43	0XA12 43 0XA13 43	0XA14 43 0XA15 43	0XA20 44 0XA21 44	0XA22 44 0XA23 44	0XA24 44 0XA25 44	0XA30 45 0XA31 45	0XA32 45 0XA33 45	0XA34 45 0XA35 45	0XA40 46 0XA41 46	0XA42 46 0XA43 46	0XA44 46 0XA45 46	0XA50 47 0XA51 47	0XA52 47 0XA53 47	0XA54 47 0XA55 47	70A40 46 26C06 58 19B01 2 19B00 2 22T01 3	50C13 58 52C13 58	53A01 48	---- 68B10 2 63B10 3	69B10 3 64B10 3	0XD01 5	0XD11 6	21T00 7 21D15 4 17D10 4	29D12 7 29D02 5	0XT05 8 0XD17 6	0XT06 8 0XT81 7	19T04 7 65T35 15 53T06 8	67T35 15 71T35 15	18S10 24 24D03 6 00B02 3	13C00 23		E
	3180	2900	2900	2900	2900	2900	2900	2900	2900	2900	2900	2900	2900	2900	2900	2900	2900	2900	2900	2070	2050	2040	2990	2012	2020	2020	2990	2830	2930	2930	2060	2012	2990	3560	3180		
D		61A00 42	61A05 42	60A00 42	70A00 42 25C06 56	21D00 5 30A00 42	61A10 43	71A10 45 70A20 44 71A30 45 70A30 45 71A40 46	60A10 43	61A20 44	61A21 44	60A20 44	60A21 44	61A31 45	60A31 45	61A30 45 60A30 45	21D10 6 30A30 45	61A41 46	60A41 46	71A50 47 61A40 46	70A50 47 60A40 46	51A02 48 51A03 49	50Y00 2 40Y02 2	67B10 3 70B10 3	0XD02 5	0XD12 6	21T03 7 17D03 4 17D06 4	51T00 7 53T00 7	30B02 5 25C03 55 30S04 23	0XT00 7 0XT02 7	0XT01 7 0XT03 7	53T04 7 20T03 7 30D06 4	19T03 7 50T06 8 51T06 8	0XT08 8 0XT07 8			D
	3180	2040	2040	2040	2050	2012	2040	2070	2040	2040	2040	2040	2040	2040	2040	2050	2012	2040	2040	2050	2050	2050	*	2012	2020	2020	2990	2012	2060	2900	2930	2060	2060	2930	3180		
C		0XC00 55 0XC01 55	0XC02 55 0XC03 55	0XC04 56 0XC05 56	0XC06 56 0XC07 56	0XC08 57 0XC09 57	0XC10 57 0XC11 57	0XC12 58 0XC13 58	0XC14 58 0XC15 58	0XC16 59 0XC17 59	0XC18 59 0XC19 59	0XC20 60 0XC21 60	0XC22 60 0XC23 60	0XC24 61 0XC25 61	0XC26 61 0XC27 61	0XC28 62 0XC29 62	0XC30 62 0XC31 62	0XC32 63 0XC33 63	0XC34 63 0XC35 63	70A51 47	71A51 47	53A02 48	60B11 2 60B10 2	65B10 3 13D00 4 14D00 4 15D00 4 16D00 4	03D02 5 02D02 5	03D12 6 02D12 6	18D04 6 21D05 4 17D00 4	53T25 12 55T25 12	69T35 15 16C00 23	0XS09 24	16T04 7	31D17 6 01B02 3 17T04 7	21T01 7 20T04 7 18T03 7 31S07 23 25D03 6	51T04 7 21T04 7			C
	3180	2900	2900	2900	2900	2900	2900	2900	2900	2900	2900	2900	2900	2900	2900	2900	2900	2900	2900	2040	2040	2040	2830	2070	2012	2012	2990	2012	2012	2020	2920	2990	2070	2220	3180		
B		20Y00 55	20Y02 55	20Y04 56	20Y06 56	20Y08 57	20Y10 57	20Y12 58	20Y14 58	20Y16 59	20Y18 59	20Y20 60	20Y22 60	20Y24 61	20Y26 61	20Y28 62	20Y30 62	20Y32 63	20Y34 63	51C13 58 53C13 58 20C16 59 20C17 59 73B10 3	53A03 49	51T25 12 51A04 49 51A05 49	40Y00 2 40Y01 2	0XD03 5	0XD13 6	0XD15 4 0XD05 4	61B11 2 72B10 3 61B10 2	21C00 23 21C01 23 21C02 23	21C06 23 21C07 24 21C08 24	21C12 24 21C14 24 16S14 24	0XS04 23	0XS07 24 04D06 3	02S04 24 18D00 4 20S10 24 20S14 24 28A00 42	19S14 24 01D07 5			B
	3180	***	***	***	***	***	***	***	***	***	***	***	***	***	***	***	***	***	***	2070	2040	2060	*	2020	2020	2930	2060	2060	2060	2060	2000	2900	2070	2030	3180		
A		20Y01 55	20Y03 55	20Y05 56	20Y07 56	20Y09 57	20Y11 57	20Y13 58	30Y13 58	20Y15 58	20Y17 59	20Y19 59	20Y21 60	20Y23 60	20Y25 61	20Y27 61	20Y29 62	20Y31 62	20Y33 63	20Y35 63	53A04 49	53A05 49	05D02 5 07D02 5	05D12 6 07D12 6	30D02 5 30D12 5 20D04 6	0XD04 6	0XB00 2	21C03 23 2.C04 23 21C05 23	21C09 24 21C10 24 21C11 24	25C00 55 25C01 55 25C02 55	0XS10 24 0XS14 24	0XS11 24 02D06 7	29A00 23 33S07 42 21S04 23	19S10 24			A
	3180	***	***	***	***	***	***	***	***	***	***	***	***	***	***	***	***	***	***	***	2040	2040	2012	2012	2060	2020	2020	2060	2060	2060	2900	2900	2990	2920	3180		

NOTE:

1. * 2320 FOR FAST INTERFACE
   2090 FOR SLOW INTERFACE
   2321 FOR SN30 FAST INTERFACE
   ** 2330 FOR FAST INTERFACE
   2130 FOR SLOW INTERFACE
   *** 2340 FOR FAST INTERFACE
   2140 FOR SLOW INTERFACE
   2342 FOR SN30 FAST INTERFACE

REPRODUCED FROM UNIVAC DWG NO 7030301 REV D

Figure 8-118. Chassis Map, Chassis A12A1, 1540/1541 Magnetic Tape Unit

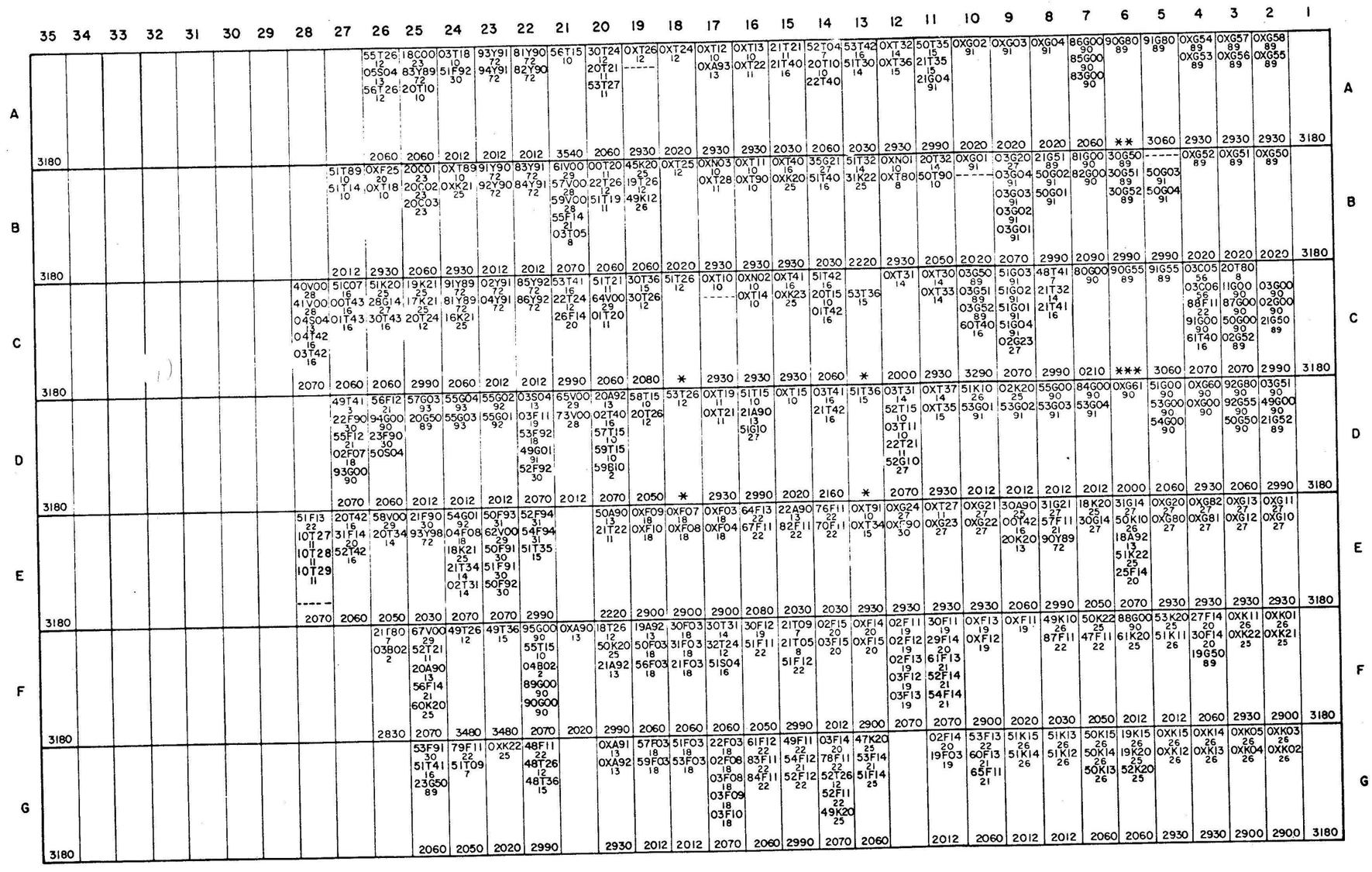

NOTE

* 2330 FOR FAST INTERFACE
2130 FOR SLOW INTERFACE

** MODULE TYPE 7104170 FOR 1540 MTU
MODULE TYPE 7003090 FOR 1541 MTU

*** MODULE TYPE 7104160 FOR 1540 MTU
MODULE TYPE 7003550 FOR 1541 MTU

REPRODUCED FROM UNIVAC DWG NO 7030298 REV H

Figure 8-119. Chassis Map, Chassis A12A2, 1540/1541 Magnetic Tape Unit

	1	2	3	4	5	6	7	8	9	10	11	12	13	14	15	16	17	18	19	20	21	22	23	24	25	26	27	28	29	30	31	32	33	34	35	
G	3180	04C00 68 06C00 68 2012	05C01 68 07C01 68 2012	04C04 68 06C04 68 2012	02C00 68 03C00 68 02C01 68 52C02 68 10C00 9 2070	55H00 17 63H00 17 68H00 17 2060	57H00 17 59H00 17 60H01 9 2060			50H01 9 59H01 17 2050		44H01 9 46H01 9 51H01 9 2990																	3180	84P00 67 1170		85P00 67 3810	80P10 66 3810	80P00 66 3810	G
F	3180	05C00 68 07C00 68 2012	04C03 68 06C03 68 2012	05C04 68 07C04 68 2012	51C02 68 71H00 17 65H00 17 2060	67H00 17 2830				0XH01 9 2930			74H00 17 2012															3180	79P00 66 1170		58H01 9 3580	56H01 9 3590	48H01 9 3580	F
E	3180	04C01 68 06C01 68 2012	05C03 68 07C03 68 2012	03C01 68 02C03 68 03C03 68 02C04 68 03C04 68 2070	72H00 17 2012	66H00 17 53H01 9 2050		49H01 9 20H02 9 61H01 9 3290	60H00 17 47H01 9 18H02 9 54H01 9 69V00 29 2070	99M00 31 57H01 9 55H01 9 2060	39H00 9 42H01 9 40H01 9 40H00 17 42H00 17 2070	.01 .1 1.0 10 1000	97M00 31 0850	98M00 31 0070															3180			58H00 17 * 3580	56H00 17 3580	19H02 9 3590	E
D																																	64H00 17 3570	62H00 17 3590		D
C																																	-15VR 66 1090			C
B																																				B
A																																				A
	1	2	3	4	5	6	7	8	9	10	11	12	13	14	15	16	17	18	19	20	21	22	23	24	25	26	27	28	29	30	31	32	33	34	35	

NOTE:
* MODULE TYPE 7003580 FOR 1540 MTU
7003570 FOR 1541 MTU

REPRODUCED FROM UNIVAC DWG NO 7030300 REV C.

Figure 8-120. Chassis Map, Chassis A13A1, 1540/1541 Magnetic Tape Unit

REVISED AUGUST 7, 1972

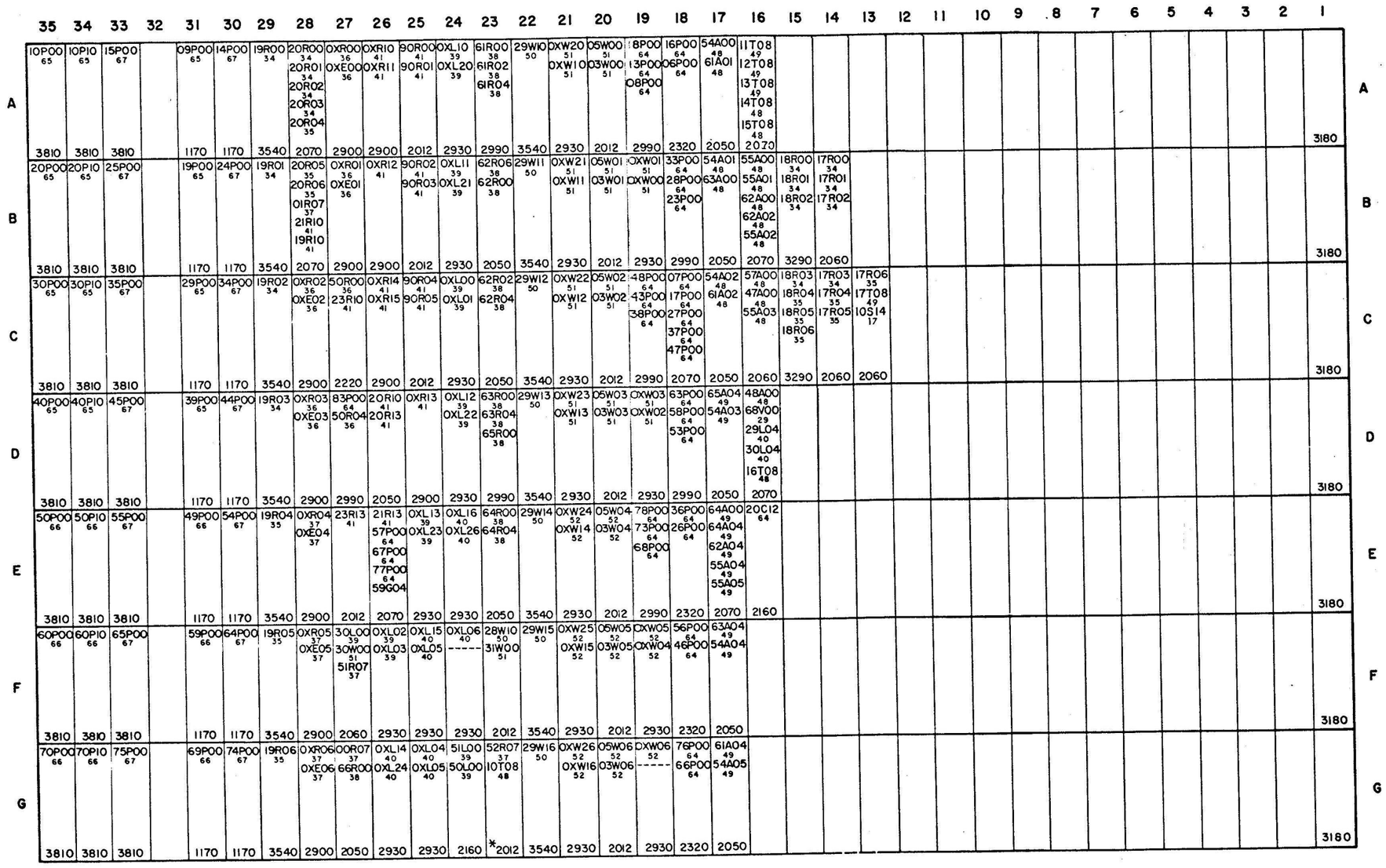

NOTE:
1. * 2013 MODEL AND 2012 MODEL ARE INTERCHANGEABLE.

REPRODUCED FROM UNIVAC DWG NO 7070299 REV C.

Figure 8-121. Chassis Map, Chassis A13A2, 1540/1541 Magnetic Tape Unit

REVISED AUGUST 7, 1972

	32	31	30	29	28	27	26	25	24	23	22	21	20	19	18	17	16	15	14	13	12	11	10	9	8	7	6	5	4	3	2	1	
A		52M00 79	81M05 75		57M00 75 22M05 69	50M01 74 90M05 75 -----	50M05 74	40M01 73 38M00 73	49M01 74 91M05 75 89M05 75 59M05 75 69M05 75	0XM06 74	55M00 74 26M00 73	0XM04 73 -----	----- 30M00 73 40M00 73	0XM01 73 0XM02 73	39M00 73 20M01 73 30M06 73 41M00 73 18M00 73	0XM00 73	18M05 74 -----	0XM50 76	39M50 76 10M04 73 30M56 76 41M50 76 10M54 76	0XM51 76 0XM52 76	----- 30M50 76 40M50 76	0XM54 76 -----	55M50 77 26M50 76	0XM56 77	81M55 77	57M50 77 22M55 70	----- 51M03 75 59M70 87 59M20 86					A
	3180	2920	2330		2220	2060	2920	2830	2070	2020	2050	2930	2060	2930	2070	2020	2320	2020	2070	2930	2060	2930	2050	2020	2330	2220	2060					3180	
B	+ 15VR 84	03M00 74 49M06 74 ----- ----- 49M03 75	03M02 74 02M02 74 49M00 74 49M05 74 48M05 74	70M50 75	03M05 75 62M16 82	03M55 77 62M15 82	----- 62M14 82	69M11 82 62M13 81	67M11 82 62M12 81	23M50 73 62M11 81	23M00 74 62M10 81	00M05 74 30M04 74 20M05 74 20M02 73 25M00 73	29M55 76 01M05 74	47M03 77 37M50 76 19M05 74 30M05 74 29M05 74	79M05 75 36M00 73 36M50 76 79M55 77		48M51 76 48M01 74	50M06 74		80M05 75 80M55 77 37M00 73 30M55 76 -----	----- 01M55 76	00M55 76 49M51 77 20M55 76 27M50 77 29M06 73	60M05 75	40M51 76 38M50 76	50M51 77 ----- 55M53 77	20M56 77 20M06 74	03M52 77 02M52 77 03M50 77 49M55 77 27M00 75	24M50 77 24M00 75				B
	3530	2070	2070	2920	2012	2012	2012	2012	2012	2012	2012	2070	2050	2070	0780		2830	2920		2070	2050	2070	2920	2830	2060	2090	2070	2090				3180	
C	70M11 82	61M16 82	61M15 82	61M14 82	61M13 81	61M12 81	61M11 81	61M10 81	61M66 84	61M65 84	61M64 84	61M63 83	61M62 83	61M61 83	61M60 83	70M61 84		-15VR 84	84	TB2			TB1					56M03 75	56M53 77	60M20 86	60M70 87		C
	3530	3510	3510	3510	3510	3510	3510	3510	3510	3510	3510	3510	3510	3510	3510	3530		1090	1000									1070	1070	1170	1170	3180	
D	82	60M16 82	60M15 82	60M14 82	60M13 81	60M12 81	60M11 81	60M10 81	60M66 84	60M65 84	60M64 84	60M63 83	60M62 83	60M61 83	60M60 83	84	84	61M26 86	61M25 86	61M24 86	61M23 85	61M22 85	61M21 85	61M20 85	61M76 88	61M75 88	61M74 88	61M73 87	61M72 87	61M71 87	61M70 87		D
	1000	3500	3500	3500	3500	3500	3500	3500	3500	3500	3500	3500	3500	3500	3500	1000	1000	3520	3520	3520	3520	3520	3520	3520	3520	3520	3520	3520	3520	3520	3520	3180	

REVISIONS						
SYM	ZONE	EIR	DESCRIPTION	CHK	DATE	APPROVED
A		69698	SEE EIR	BP	4-11-66	D.W.B.
B		75711	SEE EIR	BP	8-26-66	D.W.B.
C		90352	SEE EIR	BP	1-17-67	[illegible]
D		91195	SEE EIR	BP	9-26-67	[illegible]

FIGURE 8-122

IDENT NO. 7030296-00

THIS DOCUMENT CONTAINS CONFIDENTIAL INFORMATION OF THE UNIVAC DIVISION OF SPERRY RAND CORPORATION AND IS FURNISHED PURSUANT TO THE FOLLOWING INSTRUMENT

ON THE UNDERSTANDING THAT THIS DOCUMENT AND THE INFORMATION THEREON MAY NOT BE PLACED WITH IN ANY MANNER EXCEPT BY THE PURCHASE OF THAT INSTRUMENT OR AS OTHERWISE PERMITTED IN WRITING BY THE UNIVAC DIVISION OF SPERRY RAND CORPORATION

QTY REQD	FIND	REF DES	CODE IDENT	DWG SIZE	PART OR IDENTIFYING NO.	NOMENCLATURE OR DESCRIPTION
LIST OF MATERIAL						

NEXT ASSY | EQUIPMENT

APPLICATION

COMMODITY CODE

UNLESS OTHERWISE SPECIFIED
DIMENSION IN INCHES. TOLERANCE ON 2 PLACE DECIMALS ± | 3 PLACE DECIMALS ± | ANGLES ±
HOLE DIAMETER TOLERANCE
0 THRU .250 +.003 −.002 | .251 THRU .500 +.005 −.003 | .501 & LARGER +.010 −.005
THREADS EXT CL 2A, INT CL 2B
MATERIAL
FINISH

	NAME	DATE
LAYOUT		
DRAFTSMAN	D. STATTS	6-23-65
CHECKER	B. POPOV BP	11-15-65
ENGINEER	R.D. MCCUMBER	11-15-65
APPROVAL	[signature]	11-15-65

CLASS A

UNIVAC
DIVISION OF SPERRY RAND CORPORATION

TITLE
CHASSIS MAP, CHASSIS A17
1540 MAGNETIC TAPE UNIT

CODE IDENT NO.	SIZE	DWG NO.
90536	D	7030296

SCALE | WEIGHT | SHEET 1 OF 1

REVISIONS						
SYM	ZONE	EIR	DESCRIPTION	CHK	DATE	APPROVED
A		69721	SEE EIR		9-1-66	J.W.B.
B		75655	SEE EIR		5-11-66	J.W.B.
C		77158	SEE EIR		1-18-67	J.W.B.
D		90352	SEE EIR		7-25-67	J.W.B.

	16	15	14	13	12	11	10	9	8	7	6	5	4	3	2	1	
A	22M05 71 57M00 80 2220	39M00 78 10M04 78 30M05 79 29M05 79 20M05 79 2070	41IM00 03M02 78 58M00 79 30M06 2070	53M03 79 3580		52M00 80 70M05 80 2050	55M03 79 27M00 80 30M04 78 20M02 78 25M00 78 2070	19M05 79 00M05 79 20M01 78 18M00 78 49M06 79 2070	0XM06 79 2020	01M04 X78 ---- 2930	29M06 78 52M03 79 54M03 79 2060	01M01 X78 01M02 X78 2930	0XM00 78 2020		40M01 78 38M00 78 2830	18M05 79 32M04 78 2320	A
B	+15VR 33 3530	70M11 33 3530	62M16 33 03M05 80 2012	62M14 33 62M15 33 2012	62M12 32 62M13 32 2012	62M10 32 62M11 32 2012		24M00 80 0780	90M05 80 30M00 78 80M05 80 2060	81M05 80 2330	60M05 80 26M00 78 2050	50M05 79 01M05 79 2050	89M05 80 59M05 80 91M05 80 02M02 80 03M02 80 2070	69M05 80 49M00 80 49M05 79 48M05 79 03M00 79 2070	50M06 79 55M00 79 2050	50M01 80 40M00 78 51M03 79 2060	B
C	61M16 33 3510	61M15 33 3510	61M14 33 3510	61M13 32 3510	61M12 32 3510	61M11 32 3510	61M10 32 3510	33 1000	-15VR 33 1090	3180	3180	20M06 79 56M03 80 36M00 80 2940	---- 60M20 54 1170	TBI			C
D	60M16 33 3500	60M15 33 3500	60M14 33 3500	60M13 32 3500	60M12 32 3500	60M11 32 3500	60M10 32 3500	1000		61M26 54 3520	61M25 54 3520	61M24 54 3520	61M23 53 3520	61M22 53 3520	61M21 53 3520	61M20 53 3520	D

FIGURE 8-123

QTY REQD	FIND	REF DES	CODE IDENT	DWG SIZE	PART OR IDENTIFYING NO.	NOMENCLATURE OR DESCRIPTION

LIST OF MATERIAL

IDENT NO. 7030297-00

THIS DOCUMENT CONTAINS CONFIDENTIAL INFORMATION OF THE UNIVAC DIVISION OF SPERRY RAND CORPORATION AND IS FURNISHED PURSUANT TO THE FOLLOWING INSTRUMENT

ON THE UNDERSTANDING THAT THIS DOCUMENT AND THE INFORMATION THEREON MAY NOT BE DEALT WITH IN ANY MANNER EXCEPT FOR THE PURPOSES OF THAT INSTRUMENT OR AS OTHERWISE PERMITTED IN WRITING BY THE UNIVAC DIVISION OF SPERRY RAND CORPORATION

NEXT ASSY | EQUIPMENT

APPLICATION

COMMODITY CODE

UNLESS OTHERWISE SPECIFIED
DIMENSION IN INCHES. TOLERANCE ON
2 PLACE DECIMALS ± | 3 PLACE DECIMALS ± | ANGLES ±

HOLE DIAMETER TOLERANCE

0 THRU .250	.251 THRU .500	.501 & LARGER
+ .003	+ .005	+ .010
— .002	— .003	— .005

THREADS: EXT CL 2A, INT CL 2B

MATERIAL

FINISH

		DATE
LAYOUT		
DRAFTSMAN	D. STATTS	6-23-65
CHECKER	B. POPOV BP	11/15/65
ENGINEER	R.D. MCCUMBER RDM	11-15-65
APPROVAL		11/15/65

CLASS A

UNIVAC
DIVISION OF SPERRY RAND CORPORATION

TITLE

CHASSIS MAP, CHASSIS A3A3
1541 MAGNETIC TAPE UNIT

CODE IDENT NO.	SIZE	DWG NO.
90536	D	7030297

SCALE | WEIGHT | SHEET 1 OF 1